VictorTaichung

Management System
ISO 9001:2015
ISO 14001:2015
OHSAS 18001:2007

www.tuv.com
ID 0091003197

The Vturn Range Profile

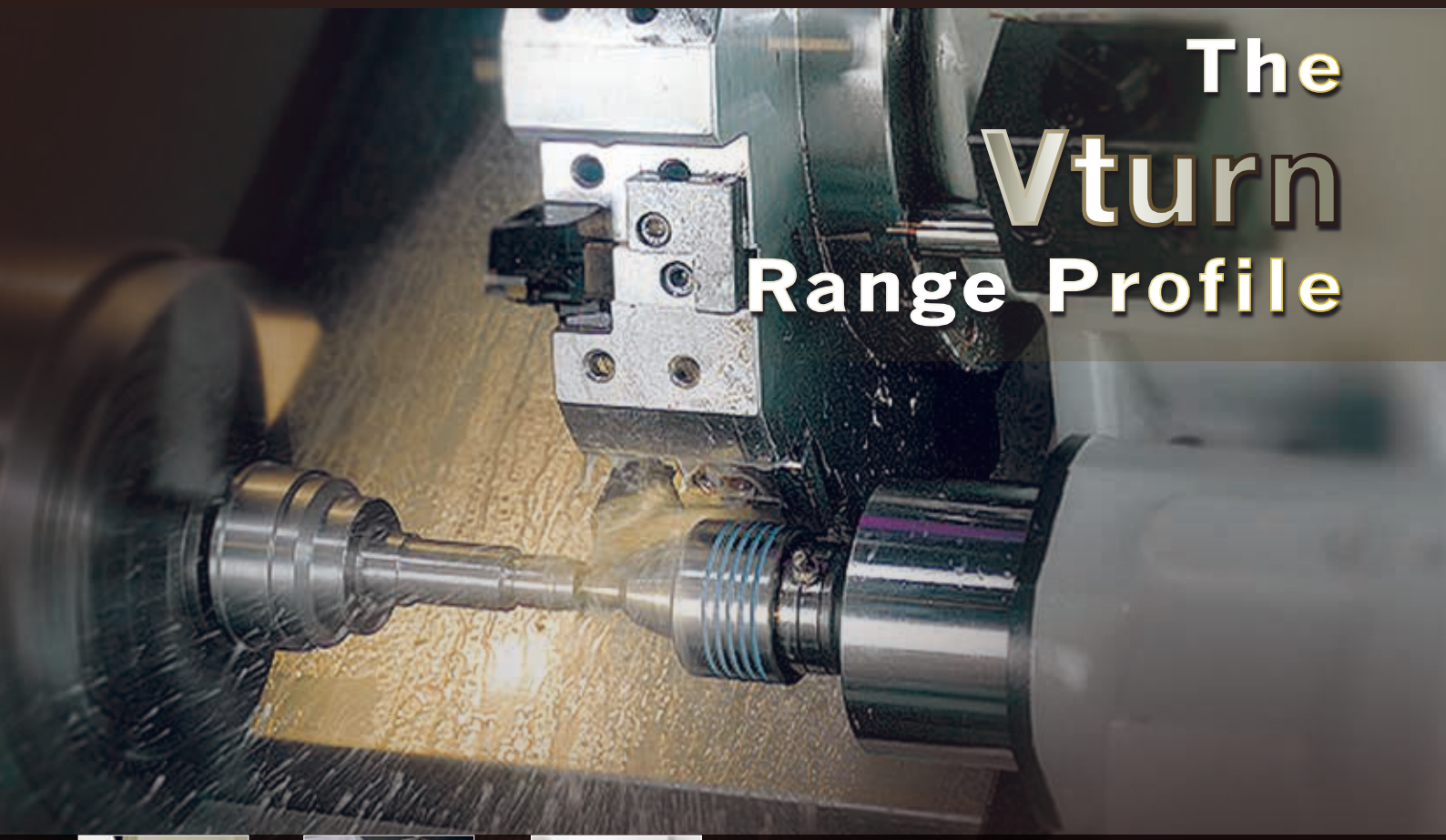

Increased productivity with every turn

Victor Taichung - an established ISO-9001 & 14001 company

Vturn Lathes

The cornerstone on which to build your production.

From the initial design stages through to the final testing, machine production is tightly controlled and monitored adhering strictly to the principles setout in ISO 9001 & 14001. In today's increasingly competitive market, Victor Taichung has held true to traditional methods of building quality and reliable machine tools that will maintain their accuracies and their values in years to come.

Vturn-16 / 20 / 26

Entry model for reliable heavy cutting.

- Box slideways with hardness HRC 55 for heavy cutting.
- Genuine 45˚ slant bed for minimum distance from Z-axis ball screw to the tool tip.
- Hydraulic 6"/8"/10" chuck is offered as standard.
- Programmable tailstock and chip conveyor is offered as standard.
- Wide range spindle motor Fanuc αPi is installed to offer high cutting force at low rpm.
- High reliability and cost-effective.
- Maximum turning length 610mm for Vturn-16/20/26 and 1090mm for Vturn-26/110.
- Special LSB option on Vturn-26 for bar capacity 91mm/2500rpm.

VturnII-16 / 20

Available with upgraded servo turret, built-in spindle, C-axis, and rear chips disposal.

- Genuine 30˚ one piece slant bed enables large turning diameter 440mm.
- Box slideways with power full spindle motor 11/15kW for heavy cutting.
- Servo driven turret for quick tool indexing.
- Right or Rear chip disposal.
- Servo driven turret for quick tool indexing.
- C-axis available with built-in spindle allows faster acceleration time and less vibration so as to improve overall efficiency and accuracy.

VICTOR-TAICHUNG

Vturn-36
2-step gearbox for heavy cutting.

- Box slideways with hardness HRC 55 for heavy cutting.
- Genuine 45° slant bed for minimum distance from Z-axis ball screw to the tool tip.
- Hydraulic 12" chuck is offered as standard.
- 2-step gearbox is included to further enhance the cutting torque at low rpm.
- Maximum turning length 855mm for Vturn-36/85 and 1255mm for Vturn-36/125.
- Available with C-axis spindle and live tooling by Victor's own VDI turret.
- Special LSB option with spindle nose A2-11 for bar capacity 160mm /1300rpm.

Vturn-40 & Vturn-45
Turning center with turning length from 1.25 to 4.25 meters.

- Rapid feed rate 20/20 m/min for Vturn-40/220 & Vturn-45/220 and 20/12 m/min for Vturn-40/325 & Vturn-45/325, 20/8 m/min for Vturn-40/425 & Vturn-45/425.
- Maximum turning length 4250mm !
- Single piece cast slant bed (45°) for minimum distance from ball screw to the tool tip.
- Box slideways with hardness HRC 55 for heavy cutting.
- Hydraulic 15" chuck is offered as standard.
- Spindle nose A2-11.
- 2-step gearbox is included to further enhance the cutting torque at low rpm.
- Available with C-axis by Victor's own VDI or BMT turret.

Vturn-46
4-step gearbox for powerful heavy cutting.

- Box slideways with hardness HRC 55 for heavy cutting.
- Genuine 60° slant bed with minimal distance from Z-axis ball screw to the tool tip so as to reduce the chip built-up.
- Hydraulic 15" chuck is offered as standard and optional 24" chuck is possible.
- Built-in 4-step gearbox inside the headstock further enhances the cutting torque at low rpm.
- Spindle nose A2-11.
- Maximum turning length 1650mm.
- Available with C-axis spindle and live tooling by Victor's own VDI turret.

Manufacturing Philosophy

Headstock machining & boring:

To ensure the quality control on the accurate parts, such like headstock and spindle, Victor Taichung has developed their own spindle boring machines to ensure long service life for bearing installation.

Headstock & spindle assembly:

All spindles are assembled in-house in a temperature controlled environment and undergo a series of run-in tests of up to 24 hours. This post-assembly testing pinpoints any excessive bearing temperatures which would otherwise be crippling on the customers shop floor.

Meehanite® cast iron:

The foundation of any machine tool, this must offer rigidity, strength and above all else high damping properties. These characteristics are best found in quality nodular gray cast iron, produced in Victor's own ISO-9001 certified foundry.

All castings are made following the Meehanite process which is recognized wide as the Quality Mark for good castings.

Machine design:

Through the use of advanced CAD and CAE systems, our R&D laboratory makes computer simulations of structures to test for deformation and vibration characteristics which can later be confirmed by computer aided testing.

VICTOR-TAICHUNG

Hardened box slide ways:

Cast-in slide ways for maximum rigidity. Nodular grey cast iron offers ideal friction properties without sacrificing toughness. Heat treated using high frequency induction heating to produce a wrap around structure with hard wear resistance surface & tough internal core. A depth of 0.5mm for maximum wear resistance, ensuring accuracies are held throughout machine life.

The carriage:

To ensure smooth and accurate operation of the carriage along the slideway Victor employs the traditional craftsmanship of hand scraping by skilled technicians. This produces large contact areas for improved stability in machining. Add to this hand finished lubrication channels for improved lubrication properties to ensure the carriages benefit from traditional methods of manufacture.

Machine assembly:

With the philosophy that quality must be built in not inspected in, moving pallet assembly lines are employed so that each machine can be closely monitored and controlled long before it reaches the QC department.

This is maintained by encouraging one person to be fully responsible for the quality of each station as it progresses.

Quality inspection:

Every machine that leaves the factory floor has passed numerous inspection procedures to achieve vigorous demands of our customers.

Vturn-16, Vturn-20 & Vturn-26

Cost-effective model for reliable heavy cutting!

- Genuine 45˚ slant bed for minimum distance from Z-axis ball screw to the tool tip.
- Box slideways with hardness HRC 55 for heavy cutting.
- Hydraulic 6" /8" /10" chuck is offered as standard.
- Programmable tailstock and chip conveyor is offered as standard.
- Only wide range spindle motor Fanuc αPi is installed to offer high cutting force at low rpm.
- Z-axis ball screw diameter 40mm for heavy cutting and high reliability.
- Maximum turning length 610mm for Vturn-16/20 and 1090mm for Vturn-26/110.
- Special LSB option on Vturn-26 for bar capacity 91mm/2500rpm.

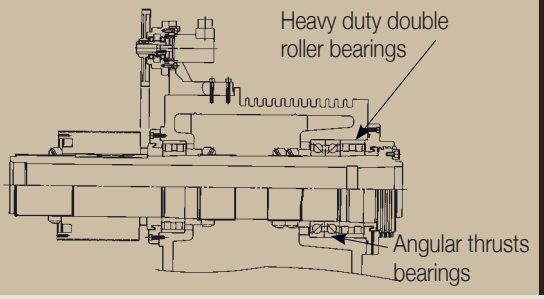

High rigidity & high precision spindle

- Encased in well ribbed headstock for maximum heat dissipation.
- Angular thrust bearings absorb axial cutting force and NN-type roller bearings facilitate heavy cutting.

Spindle Torque Output Diagram

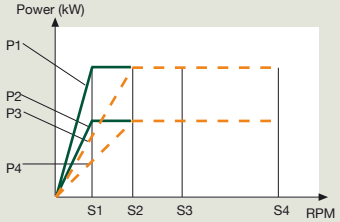

P1 (*30 min. in low winding)
P2 (cont. in low winding)
P3 (*30 min. in high winding)
P4 (cont. in high winding)

S1 (base RPM in low winding)
S2 (base RPM in high winding)
S3 (max. RPM in low winding)
S4 (max. RPM in high winding)

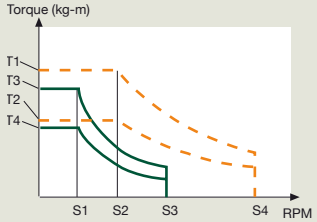

T1 (*30 min. in low winding)
T2 (cont. in low winding)
T3 (*30 min. in high winding)
T4 (cont. in high winding)

S1 (base RPM in low winding)
S2 (base RPM in high winding)
S3 (max. RPM in low winding)
S4 (max. RPM in high winding)

30 min. may be replaced by 15%, 15 min or 20 min. according to Fanuc technical specification

Model	Spindle Motor	Base Speed (rpm)		Max. Speed (rpm)	P. Cont. (kW)	P. (kW)	Tor. Cont. (kg-m)	Tor. (kg-m)
Vturn-16	αP15i	Low winding	500	1500	5	9 (15 min.)	9.73	17.5 (15 min.)
		High winding	750	6000	7.5	9 (30 min.)	9.73	11.67 (30 min.)
Vturn-20	αP15i	Low winding	350	1050	5	9 (15 min.)	13.9	25 (15 min.)
		High winding	525	4200	7.5	9 (30 min.)	13.9	16.68 (30 min.)
Opt.	αP22i	Low winding	350	1050	7.5	15 (15 min.)	20.84	41.69 (15 min.)
		High winding	525	4200	11	15 (30 min.)	20.52	27.98 (30 min.)
Vturn-26	αP30i	Low winding	308	1156	11	18.5 (15 min.)	34.77	58.47 (15 min.)
		High winding	443	3500	15	18.5 (30 min.)	32.92	40.6 (30 min.)
Vturn-26HD	αp40i	Low winding	308	1156	13	22 (15 min.)	40.98	69.36 (15 min.)
		High winding	443	3500	18.5	22 (30 min.)	40.58	48.26 (30 min.)
Opt.	αp40i	Low winding	224	840	13	22 (15 min.)	56.6	95.7 (15 min.)
		High winding	322	2500	18.5	22 (15 min.)	56	66.6 (15 min.)
Vturn-26LSB	αp30i	Low winding	323	1212	11	18.5 (15 min.)	33.19	55.81 (15 min.)
		High winding	464	2500	15	18.5 (30 min.)	31.4	38.7 (30 min.)
Opt.	αp40i	Low winding	242	906	13	22 (15 min.)	52.3	88.6 (15 min.)
		High winding	348	2500	18.5	22 (30 min.)	51.8	61.6 (30 min.)

VICTOR-TAICHUNG

Genuine slant bed

Vturn series lathes have the Z-axis ballscrew mounted on the slant bed (P1) instead of machine base (P2) to minimize the distance from ballscrew to the tool insert and thus upgrades the turret and carriage stiffness.

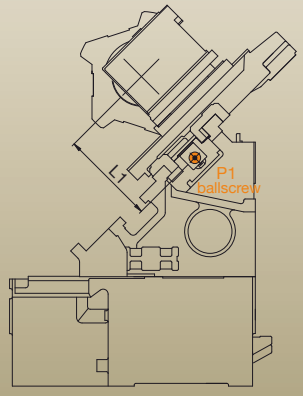

Genuine

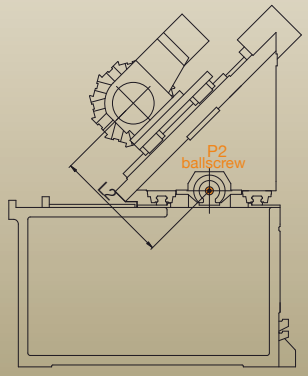

Pseudo (By triangular carriage)

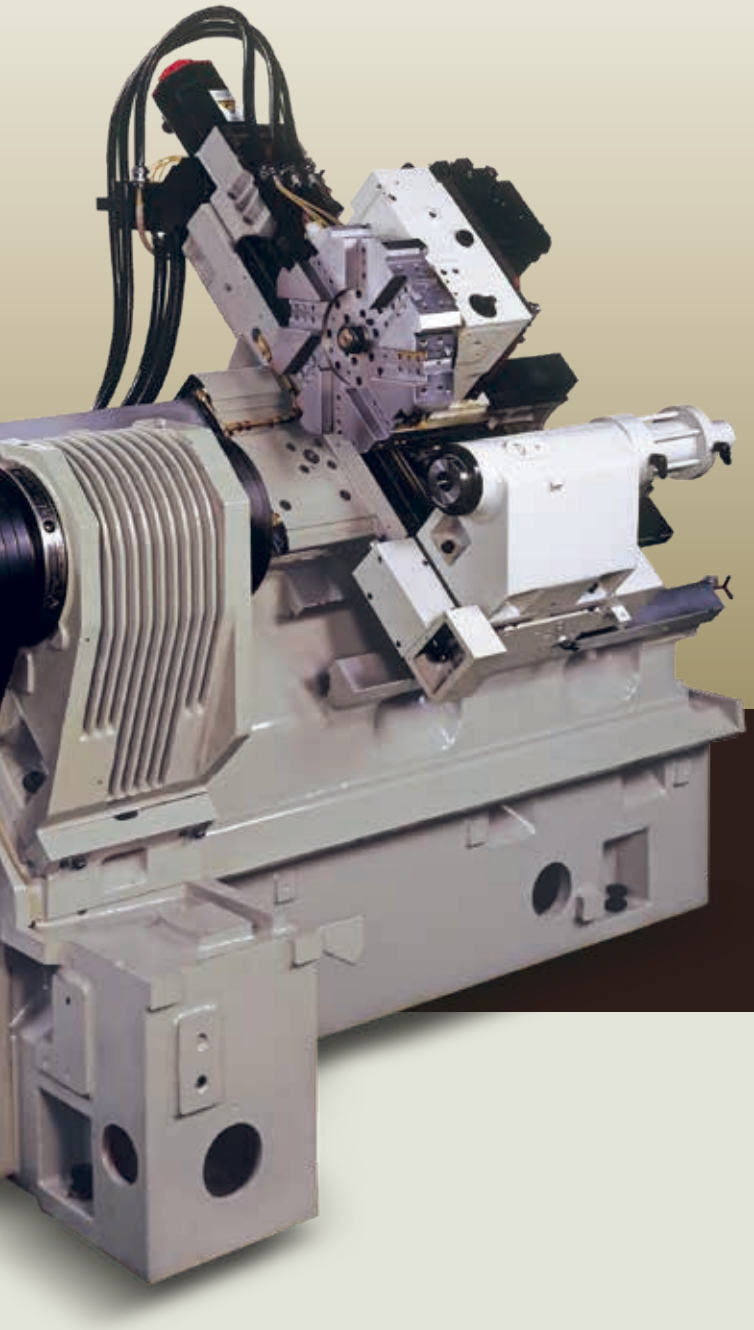

Vturn-26LSB (Large Spindle Bore) (optional)

Without the expense or space demanded by an oversized machine, Vturn-26LSB including an oversized headstock and 12" chuck combines the bed of Vturn-26 to offer bar capacity 91mm/2500rpm to minimize your investment.

Vturn-26"HD" for Heavy Duty Application

Package with the following features:

- Bigger spindle motor (αP40i) 22kW.
- Bigger Z-axis motor (α22i) 4kW.
- Larger turning diameter 410mm.
- Larger swing over carriage 380mm.
- Coolant flush on Z-axis cover.
- Upgraded guarding improves coolants and chips disposal.

VturnII-16 & VturnII-20

Available with upgraded servo turret, built-in spindle, C-axis, and rear chips disposal

- Genuine 30° one piece slant bed enables large turning diameter 440mm.
- Box slideways with power full spindle motor 11/15kW for heavy cutting.
- Servo driven turret for quick tool indexing.
- Right or Rear chip disposal.
- C-axis available with built-in spindle allows faster acceleration time and less vibration so as to improve overall efficiency and accuracy.
- Special LSB option on VturnII-20 for bar capacity 66mm/4500rpm.

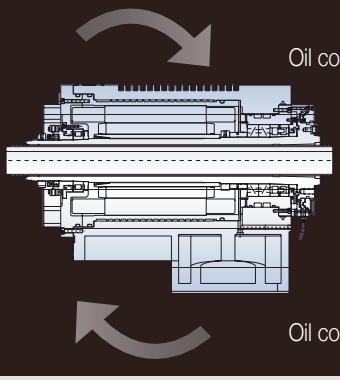

C-axis Spindle with Built-in Motor for or high accuracy

- Belt-driven spindle for standard 2-axis lathe.
- Direct Drive Spindle (DDS) with built-in motor for optional C-axis clamping offers extra torque output at low spindle speed than conventional belt-driven spindle and eliminates the vibrations from the belt for a greater surface finish and roundness.

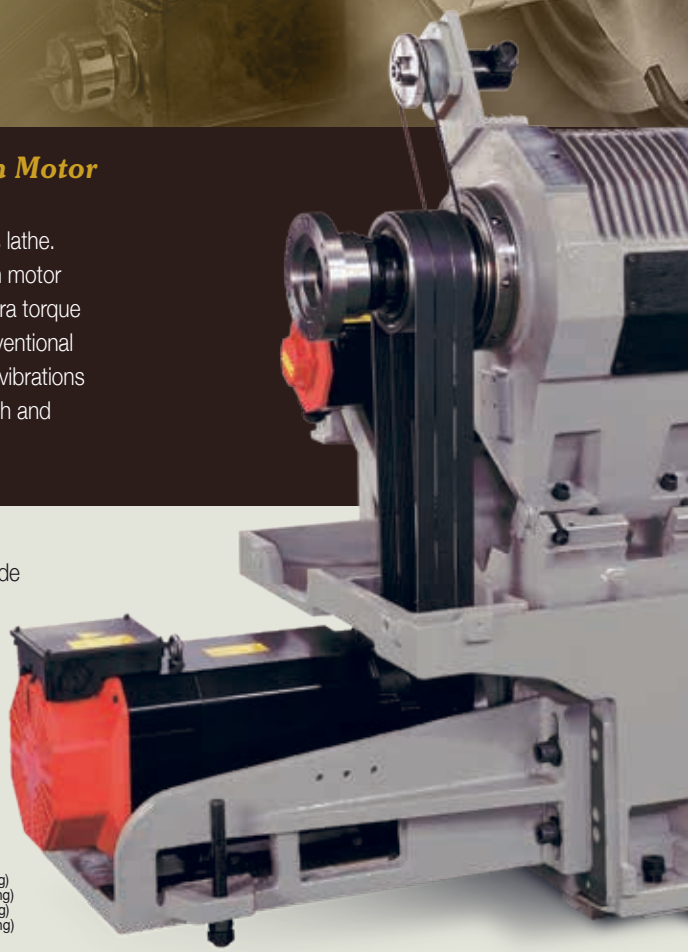

Spindle Torque Output Diagram

The directly driven spindle unit uses the powerful FANUC αPi series motors with their wide range of high torque output and fast acceleration times to optimum speeds.

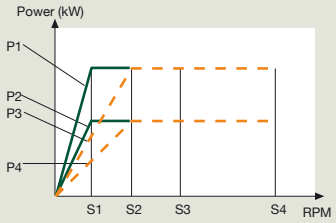

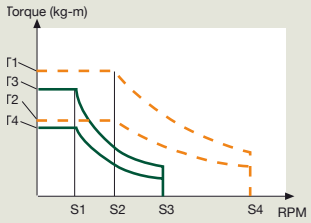

P1 (*30 min. in low winding) S1 (base RPM in low winding)
P2 (cont. in low winding) S2 (base RPM in high winding)
P3 (*30 min. in high winding) S3 (max. RPM in low winding)
P4 (cont. in high winding) S4 (max. RPM in high winding)

T1 (*30 min. in low winding) S1 (base RPM in low winding)
T2 (cont. in low winding) S2 (base RPM in high winding)
T3 (*30 min. in high winding) S3 (max. RPM in low winding)
T4 (cont. in high winding) S4 (max. RPM in high winding)

30 min. may be replaced by 15%, 15 min or 20 min. according to Fanuc technical specification

Model	Spindle Motor	Base Speed (rpm)		Max. Speed (rpm)	P. Cont. (kW)	P. (kW)	Tor. Cont. (kg-m)	Tor. (kg-m)
VturnII-16	αP22i	Low winding	500	1500	7.5	15 (15 min.)	14.6	29.2 (15 min.)
		High winding	750	6000	11	15 (30 min.)	14.4	19.6 (30 min.)
Opt.	αP15i	Low winding	500	1500	5	9 (15 min.)	9.73	17.5 (15 min.)
		High winding	750	6000	7.5	9 (30 min.)	9.73	11.67 (30 min.)
VturnII-20	αP22i	Low winding	350	1050	7.5	15 (15 min.)	20.84	41.69 (15 min.)
		High winding	525	4200	11	15 (30 min.)	20.52	27.98 (30 min.)
Opt.	αP15i	Low winding	350	1050	5	9 (15 min.)	13.9	25 (15 min.)
		High winding	525	4200	7.5	9 (30 min.)	13.9	16.68 (30 min.)
VturnII-16CV	αB160Mi	Low winding	300	900	5.5	7.5 (15%)	17.8	24.3 (15%)
		High winding	850	6000	11	18.5 (15%)	12.6	21.2 (15%)
VturnII-20CV	αB180Mi	Low winding	450	800	11	15 (20 min.)	23.8	32.4 (20 min.)
		High winding	800	4200	11	15 (30 min.)	13.3	18.2 (30 min.)

VICTOR-TAICHUNG

Servo Driven Turret for Faster Indexing

- Fast tool indexing time 0.2 seconds using servo driven turret.
- Available with Victor Taichung's own milling turret in conjunction with servo motor to offer a near constant torque output over the complete speed range up to 3000rpm.
- 12 station VDI turret with 12 live tool pockets allows quick tool changeover with commercially available tool holders.

Chip Disposal from Right or Rear

Separate chip conveyor can be positioned to expel chips from the traditional side of the machine for easy cleaning or even from the rear of the machine to reduce costly shop floor space requirement.

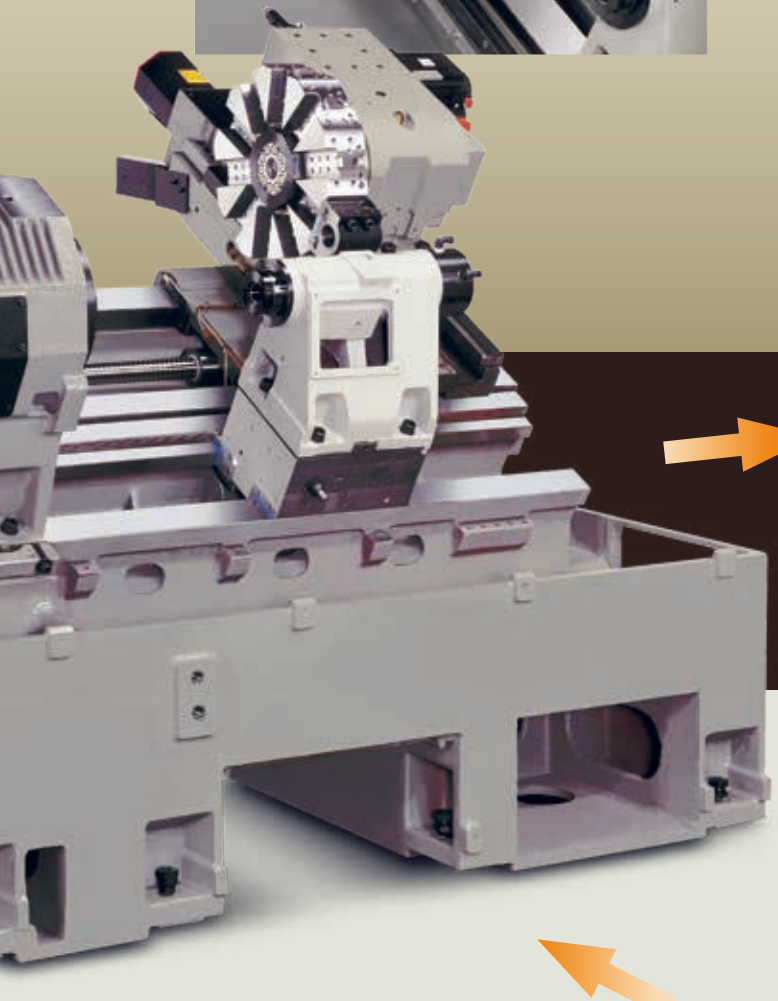

Large Spindle Bore (LSB) - 66mm / 4500rpm (optional)

Besides the popular application to link bar feeder to the lathe with part catcher, this new LSB (Large Spindle Bore) option has the bar capacity dia. 66mm and upgraded spindle speed 4500rpm to minimize your investment costs.

One-piece Slant Bed with Hardened Boaxways

- Rectangular machine base guarantees the optimal structure stiffness to sustain the high rapid feed rate 20/24 m/min (X/Z) on the lathes with box slideways.
- Optimum ribbing determined by FEM to minimize distortion during operation.
- To ensure perfect alignment in the machine structure, the bed is machined in a single set-up on a large five-face machining center.
- Separate chip conveyor can be positioned to expel chips from the traditional side for easy cleaning or from rear of the machine to link with robot application.

Vturn-36

Two step gearbox for reliable heavy cutting!

- Genuine 45˚ slant bed for minimum distance from Z-axis ball screw to the tool tip.
- Z-axis ballscrew diameter 50mm.
- 91mm bar capacity.
- Box slideways with hardness HRC 55 for heavy cutting.
- Hydraulic 12" chuck is offered as standard.
- 2-step gearbox is included to further enhance the cutting torque at low rpm.
- Maximum turning length 855mm for Vturn-36/85 and 1255mm for Vturn-36/125.
- Available with C-axis spindle and live tooling by Victor's own VDI turret.
- Special LSB option with spindle nose A2-11 for bar capacity 160mm/1300rpm.

2-step gearbox

Spindle Torque Output Diagram

- Vturn-36 STD

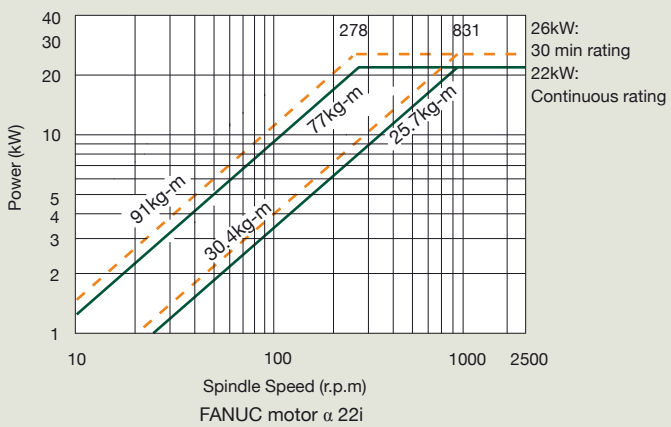

- Vturn-36CV

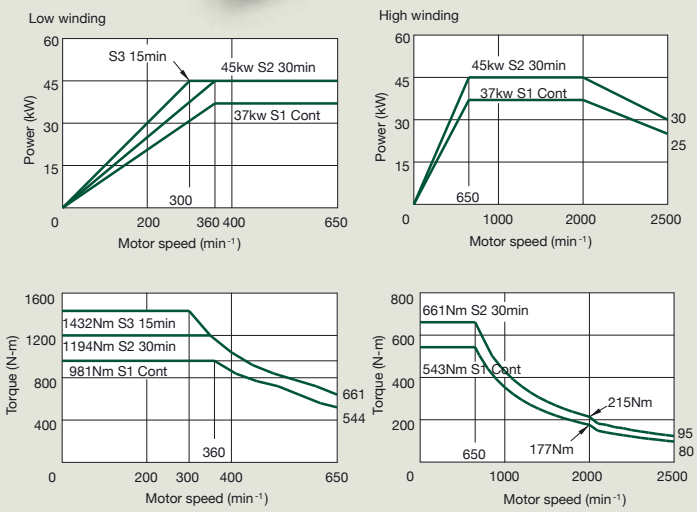

VICTOR-TAICHUNG

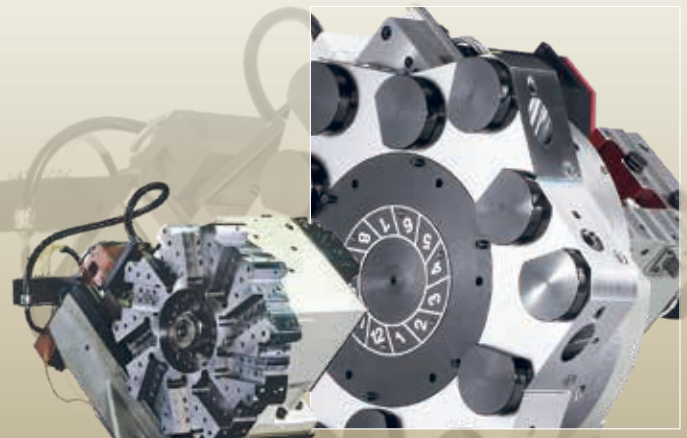

C-axis VDI turret with live tooling (CV option.)

- Live tooling is provided through the use of VDI turret that not only provide an international tooling system but also allows for quick and simple tool mounting.
- Coupling specification DIN-5480.
- Milling power 7kW/3000rpm.

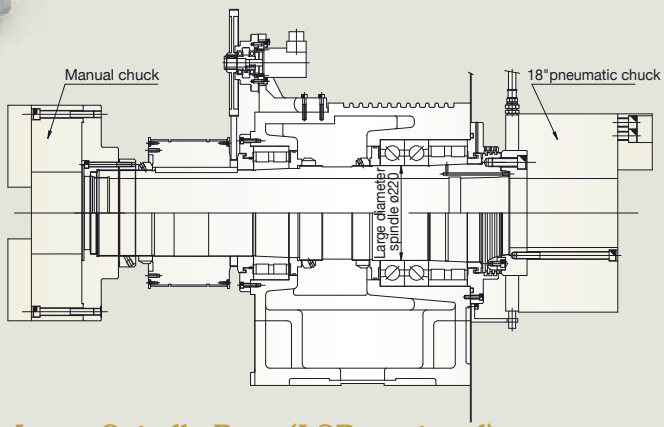

Large Spindle Bore (LSB, optional)

- Large spindle bore 160mm.
- Bar capacity of 145mm by 18" hydraulic chuck.
- Bar capacity of 160mm by 18" pneumatic chuck with another manual chuck mounted at rear of spindle for extra stability.
- Maximum spindle speed: 1500 rpm (1300 rpm limited by pneumatic chuck).

Spindle speed output diagram for Vturn-36LSB

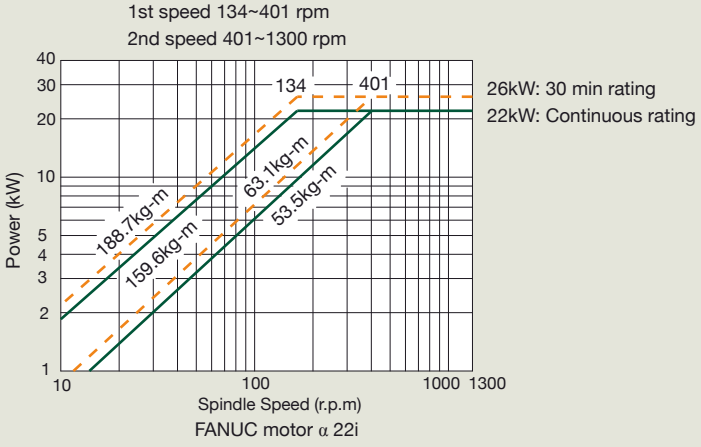

Vturn-40

Heavy cutting lathe with spindle nose A2-11 for turning length from 1250mm to 4250mm

- Spindle bore A2-11 with hydraulic chuck 15" (opt. 12").
- Bar capacity 91mm, Spindle speed 2500rpm.
- Genuine 45˚ one piece slant bed for maximal structure rigidity.
- Turning length 1250 / 2200 / 3250 / 4250 mm.
- Large ballscrew diameter in Z-axis: 50mm Vturn-40/125 & Vturn-40/220, 63mm for Vturn-40/325, 70mm for Vturn-40/425.
- Y-axis & C-axis applications available with built-in spindle for contour milling.

2-step gearbox

C-axis by built-in spindle

Spindle Torque Output Diagram

● Vturn-40 STD

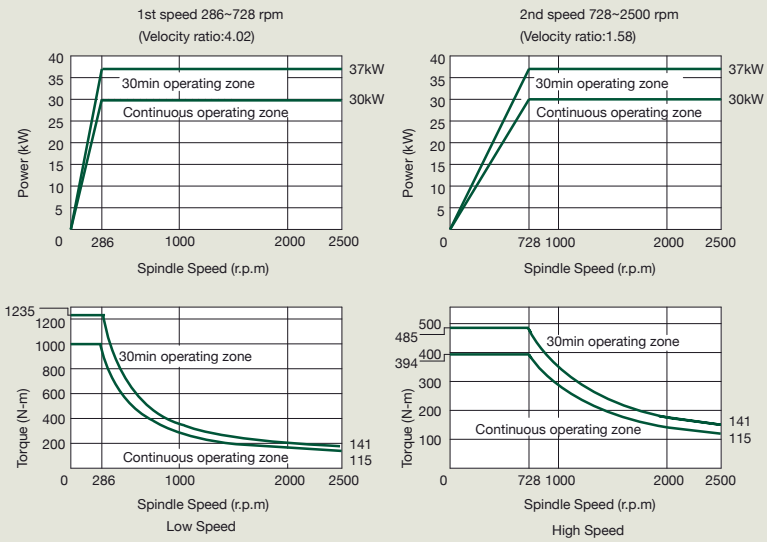

FANUC motor α 30i

VICTOR-TAICHUNG

Victor's own turret

- Wide span turret carriage upgrades structure stiffness.
- Milling turret (servo driven) available with VDI-50 for quick tool change or BMT-75 for high rigidity.

Vturn-40CV (optional)

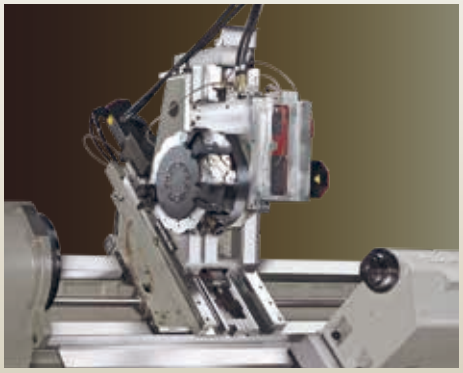

Vturn-40YCM (optional)

- Y-axis (travel : ±80mm) with BMT-75 turret.

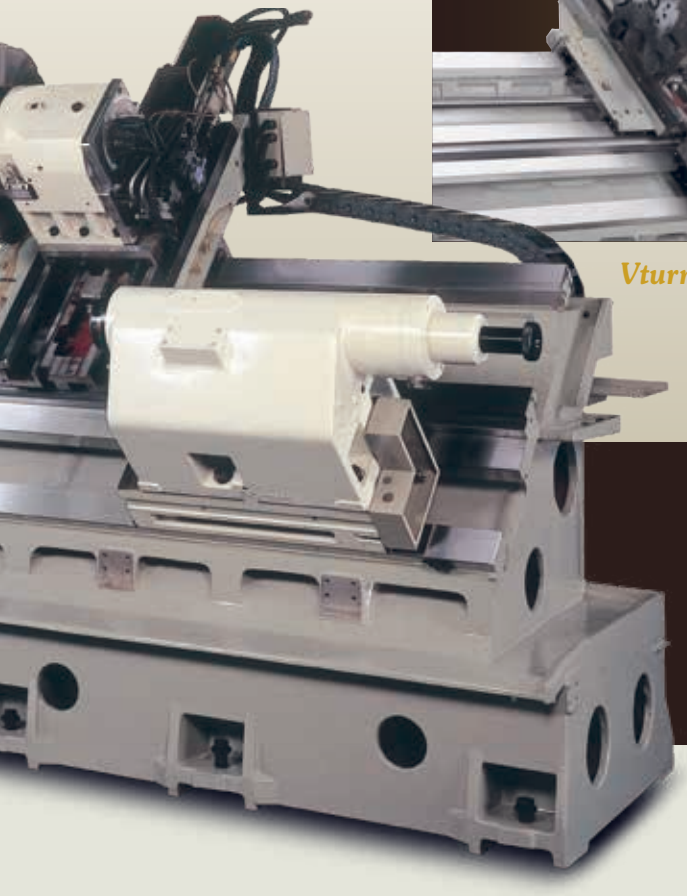

Vturn-40/220Y

Moving CRT (excl. Vturn-40/125) allows for more space for machine operator and avoids the high freight for transportation.

Vturn-40/220

- Vturn-40CV & Vturn-40(Y)CM

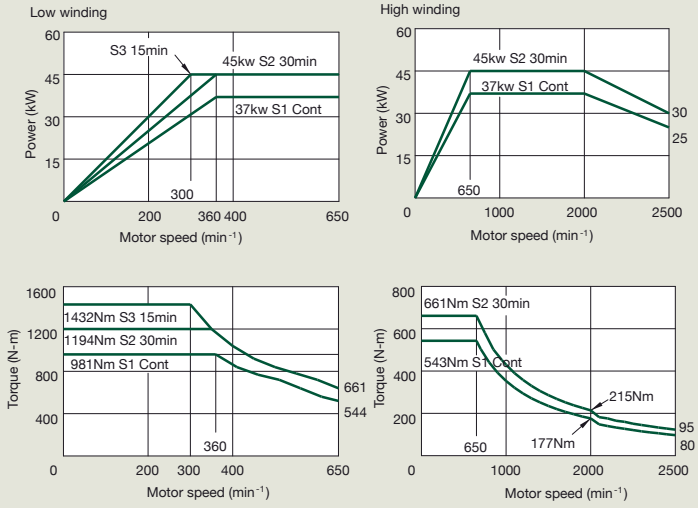

FANUC motor α B 250Mi

Manual steady rest (Standard on Vturn-40/220, Vturn-40/325 & Vturn-40/425)

- Clamping range: 280-400mm (Opt. 150-300mm)

For Vturn-40/220, 325, 425

Vturn-45

Even heavy cutting lathe with larger spindle for turning length from 1250mm to 4250mm

- Spindle bore A2-11 with hydraulic chuck 15" (opt. 18").
- Bar capacity 117.5mm, Spindle speed 2000rpm.
- Genuine 45˚ one piece slant bed for maximal structure rigidity.
- Turning length 1250 / 2200 / 3250 / 4250 mm.
- Available with Large spindle bore 135mm.
- C-axis available.

2-step gearbox

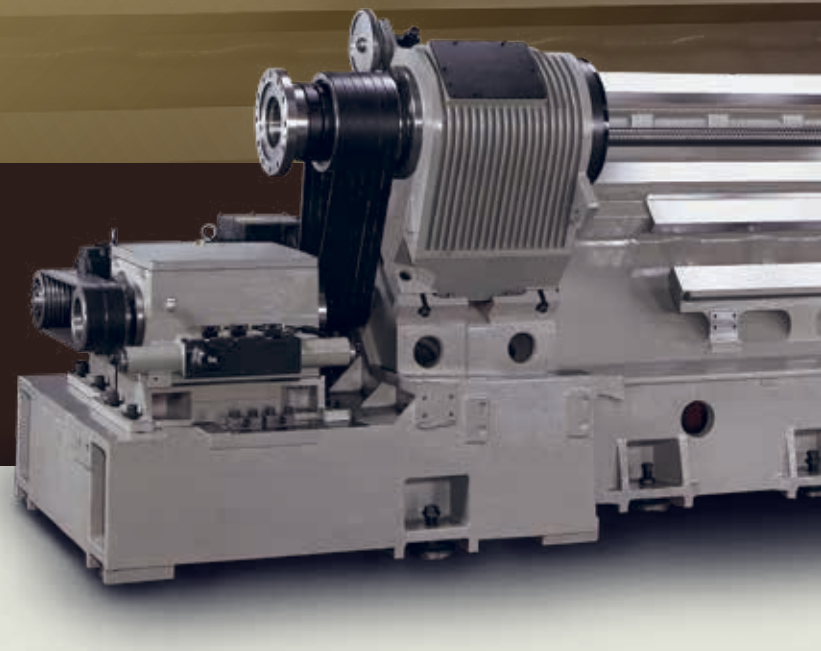

C-axis by belt-driven spindle with gearbox

Spindle Torque Output Diagram

● Vturn-45 STD

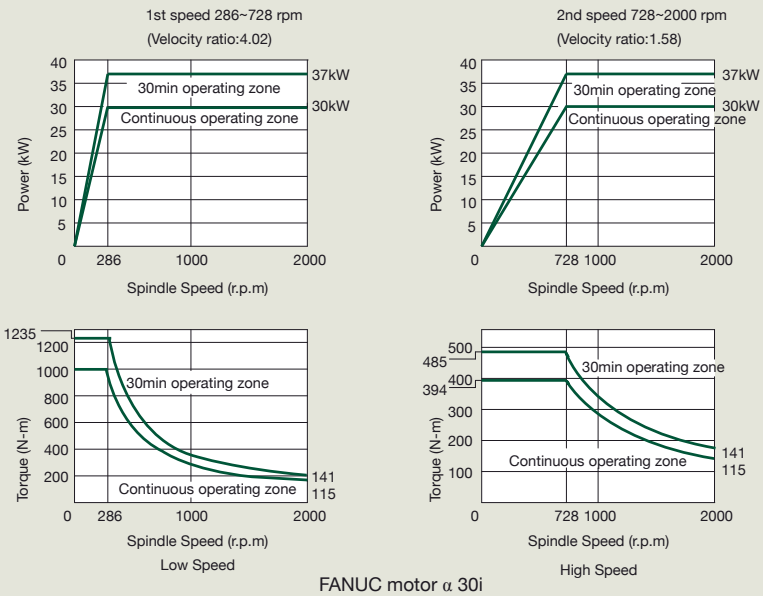

FANUC motor α 30i

VICTOR-TAICHUNG

C-axis BMT-75 turret (CM option)

- C-axis available by belt-driven headstock with higher torque output and BMT-75 milling turret.
- Milling turret (servo driven) available with BMT-75 for high rigidity.
- Milling power 7kW/3000rpm.

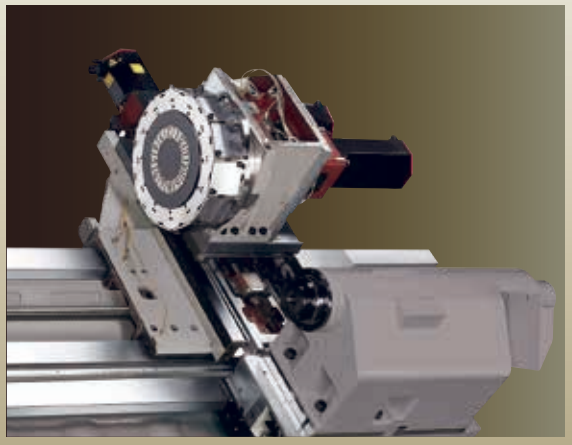

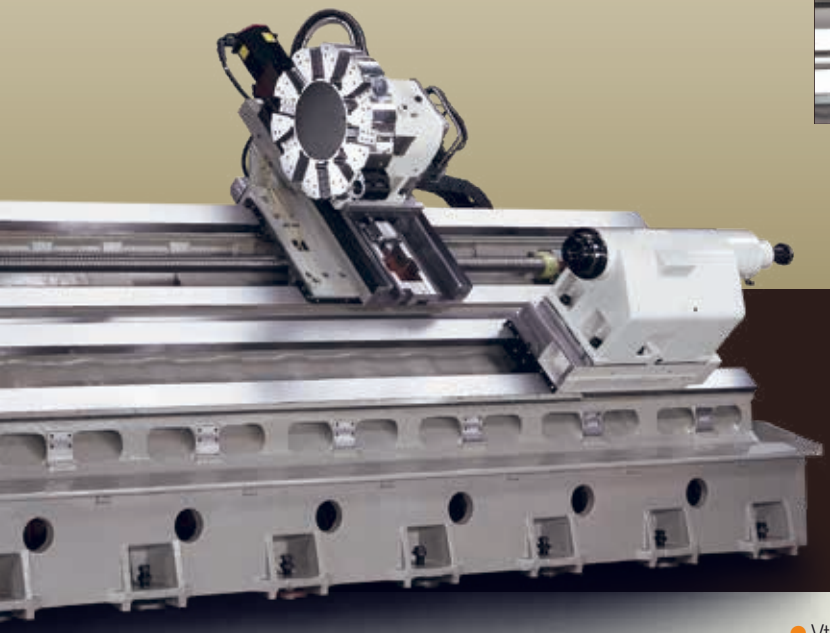

Vturn-45/125

Vturn-45/325

● Vturn-45CM (with GTP gearbox)

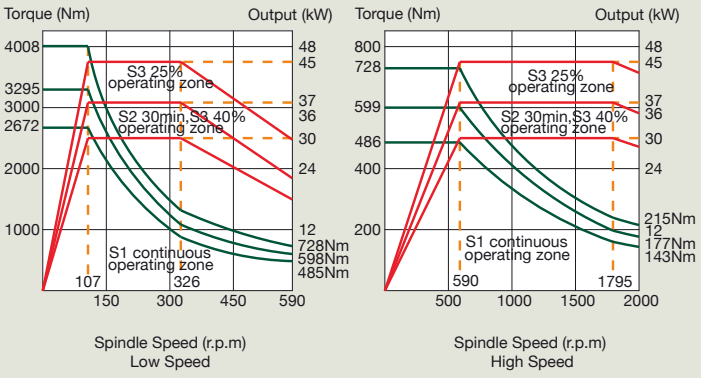

FANUC motor α 30i

● Vturn-45LSB (with Victor gearbox)

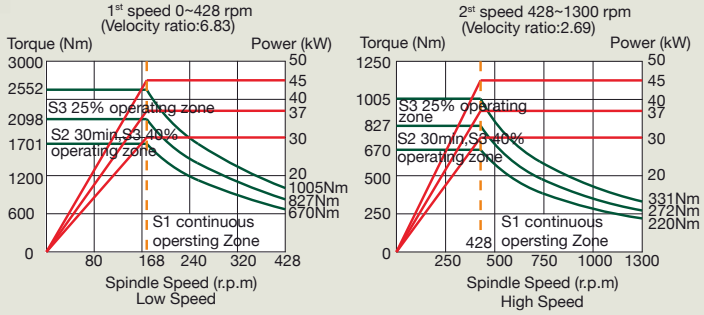

● Vturn-45LSB_HD (with GTP gearbox)

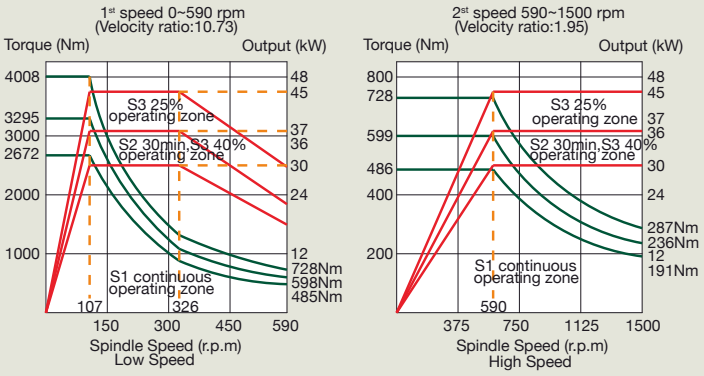

Vturn-46

Built-in 4-Step Gearbox for powerful heavy cutting!

- Genuine 60˚ slant bed for minimum distance from Z-axis ball screw to the tool tip so as to reduce the chip built-up.
- Built-in 4-step gearbox inside the headstock further enhances the cutting torque 536.4kg-m at low spindle speed 67rpm.
- Spindle nose A2-11 with hydraulic 15" chuck is offered as standard and available with 18"/21"/24" chucks.
- Z-axis ballscrew diameter 50mm.
- Maximum turning length 1650mm.
- Available with C-axis spindle and live tooling by Victor's own VDI turret.

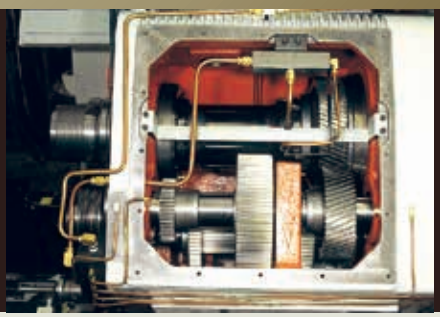

4-step gearbox

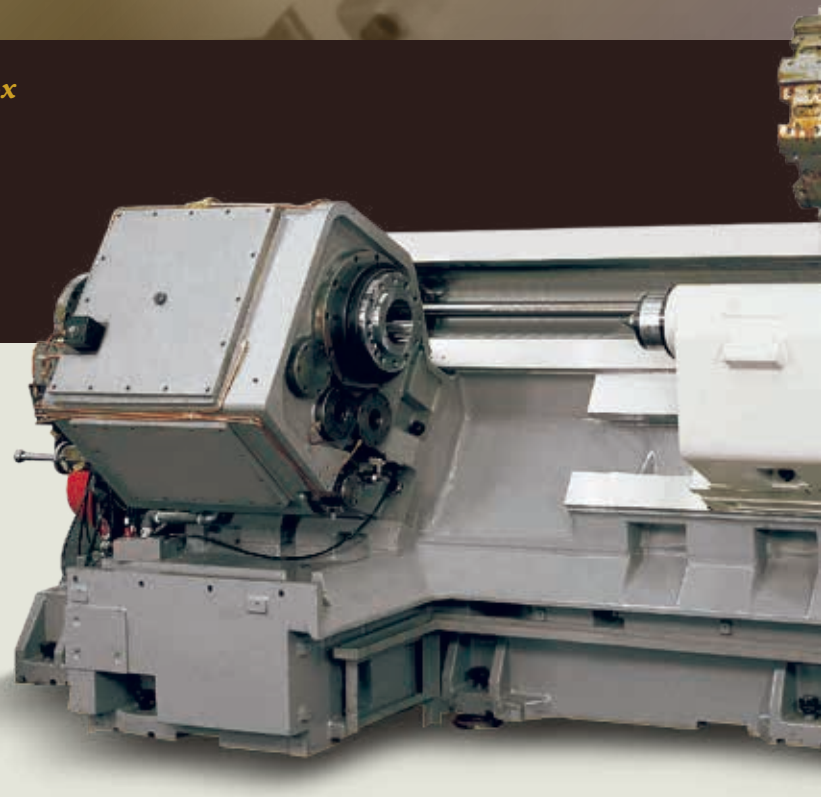

Spindle Torque Output Diagram

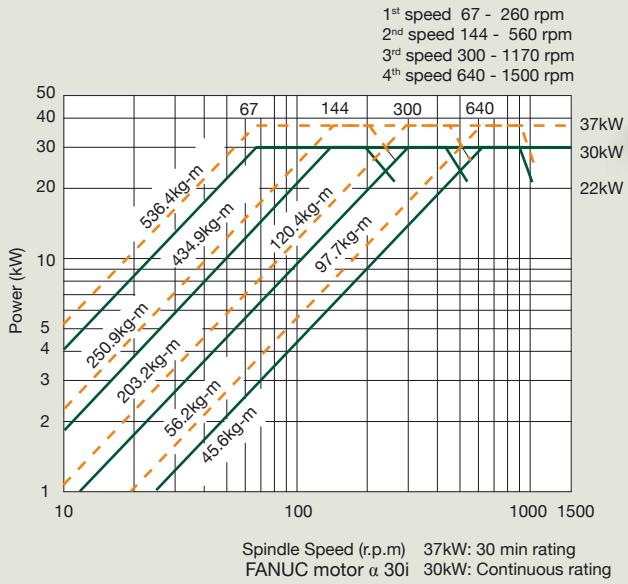

VICTOR-TAICHUNG

C-axis VDI turret with live tooling (CV option.)

- Live tooling is provided through the use of VDI turret which not only provides an international tooling system but also allows for quick and simple tool mounting.
- Cf-axis design with angular encoder is included as standard to assure high indexing accuracy.
- Coupling specification DIN-5480.
- Milling power 7kW/3000rpm.

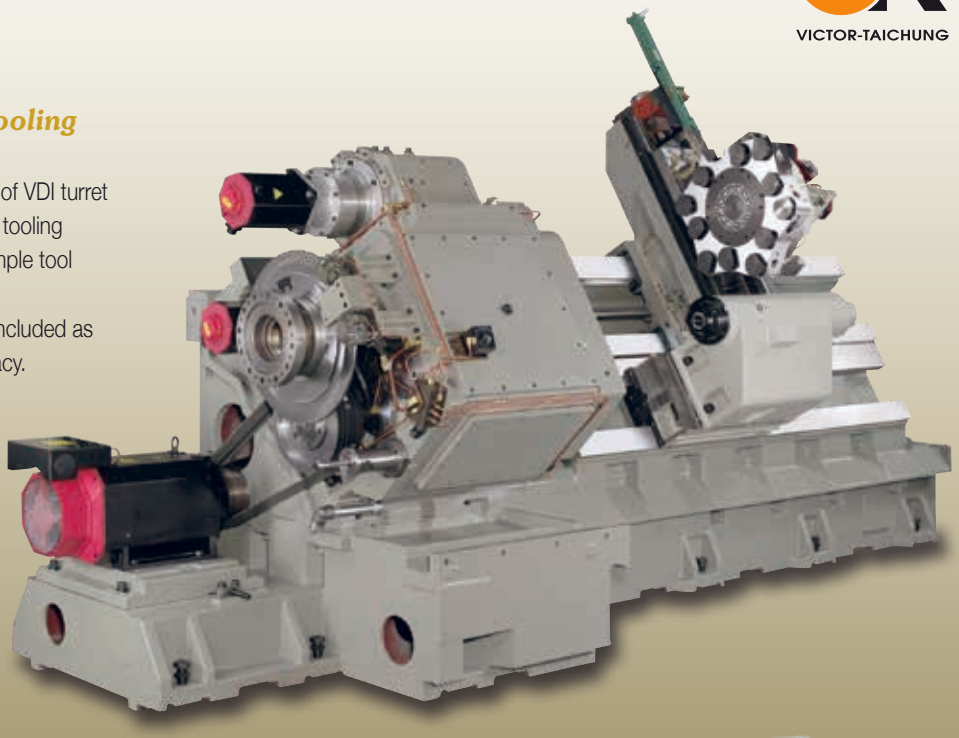

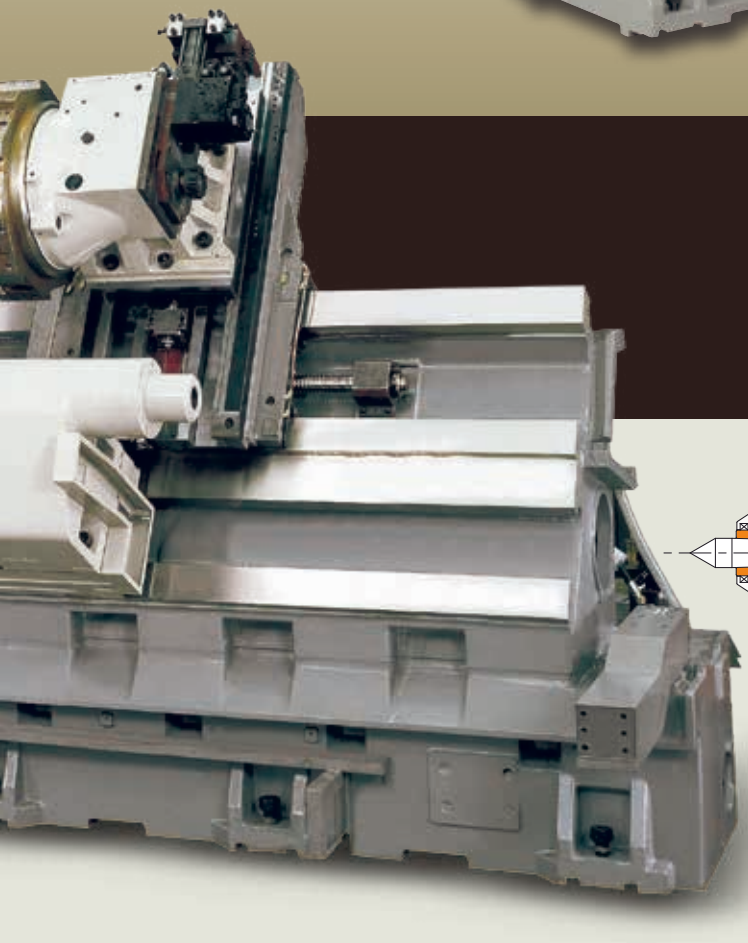

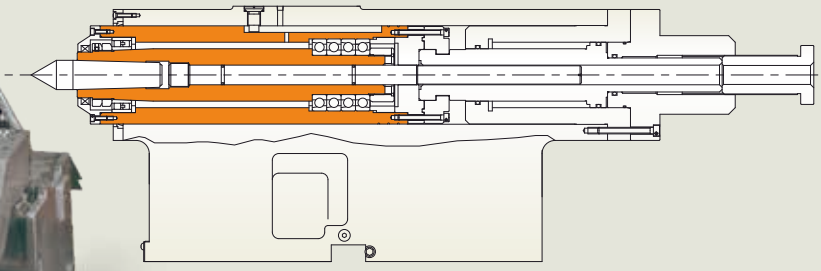

Powerful tailstock

- Built-in bearings for fixed center.
- MT#5 tailstock for powerful engagement.

Vturn-46CV cutting capability on mild steel S45C

	OD turning	Drilling (Z-axis α30i)	Milling	Tapping
Metal removal rate (spindle loading %)	792cc/min (93%)	672cc/min	30cc/min (99%)	-
Tool	Ø32x10mm	Ø58x35mm	Ø25x15mm	M16xP2 (80%)
Spindle speed	686rpm	848rpm	600rpm	300rpm
Feed	F0.35mm/rev	F0.3mm/rev	F80mm/min	F600mm/min

Standard Accessories

Reliable Fanuc CNC control

- The proven reliability of Fanuc 0i-T control is combined with Victor Taichung own PLC to offer customers an entire control system who reliability is second to none.

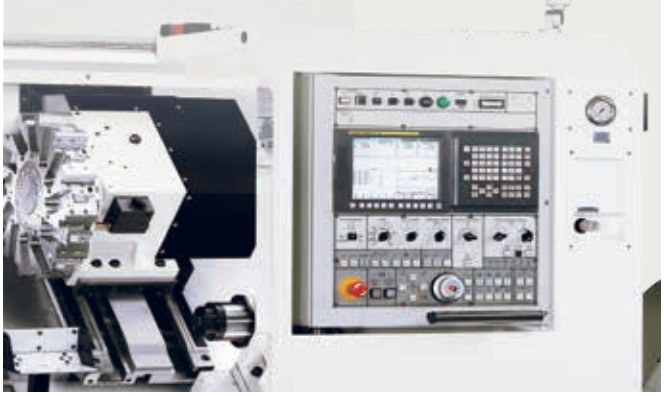

Programmable tailstock

- Mounted on slideways for maximum clamping stability.
- Hydraulic clamping to bed with variable hydraulic pressure to tailstock quill.
- Smooth tow along action by turret and programmable by M-codes.

Reliable Power Chuck

Hydraulic 3 jaw hollow chuck is foot operated for safe and easy operation.

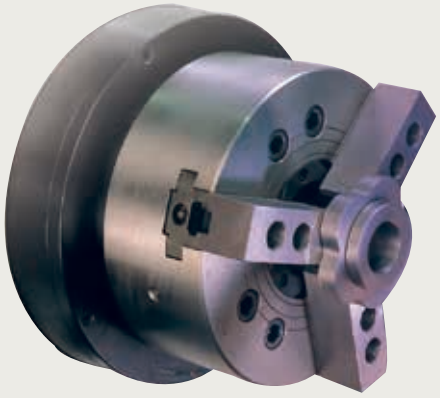

Chip conveyor and cart

Separate chip conveyor and coolant sum design with access from the front of the machine allows easy cleaning and reduces costly shop floor space requirement.

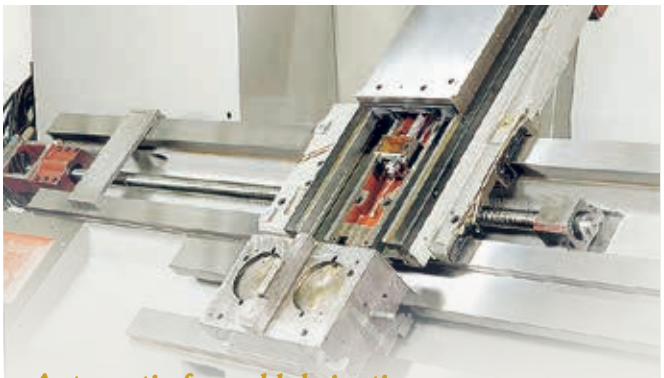

Automatic forced lubrication

All slideways & moving members are automatically lubricated.
Pressurised system is used to monitor amount of oil in circulation.
Alarm given if leak or pressure drop occurs.
Oil tank and pump located outside guarding for easy maintenance.

Separation system for oil & coolants

A drip tray cast into bed is used to catch waste lubricating oil from Z axis slideway and ballscrew.
The drip tray is sloped so that the oil can flow to an outlet at the rear of the machine.
This system reduces contamination or dilution of the cutting fluid.

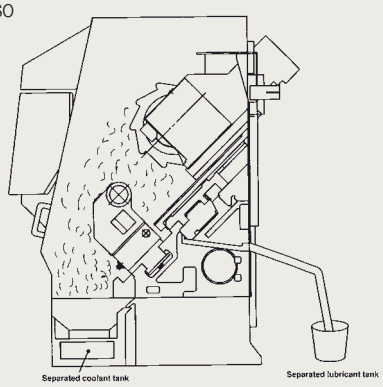

Optional Accessories

Tool Presetter (Renishaw®)

- No longer to perform tedious time consuming cuts to determine tool geometry, the operator needs only to touch the tool tip to the tool presetter sensor to get the tool geometries not only reducing tool set-up time, but reducing down time due to tool breakage.
- Manual tool presetter (MTP): Arm is rotated manually.
- Auto tool presetter (ATP): Arm is rotated automatically by programming.

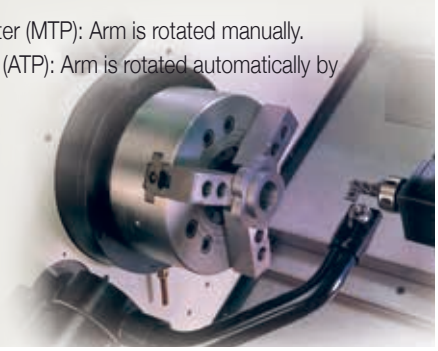

Parts catcher & parts conveyor

To enhance the machines productivity a parts catcher is available to work in conjunction with the bar feed system.
The parts catcher is fully programmable to allow automated running with finished parts being dispensed in collection tray in door compartment. Door flap is used to seal door off from swarf during contamination.
Note: Parts catcher not available for Vturn-46 For heavier parts a rotary chute system mounted below the spindle is used.

Manual steady rest

The large bar capacity and long bed of Vturn lathes make these machines ideal for shaft turning. Victor Taichung can offer inexpensive manual steady rest with manually adjusted rollers to suit this job for simple operation.

Clamping range (mm):
Vturn-16&20: Ø20~150
VturnII-16&20: Ø20~150
Vturn-26: Ø20~150 / Ø25~200
Vturn-36: Ø20~150 / Ø30~300
Vturn-40&45: Ø150~300 / Ø280~400
Vturn-46: Ø75~150 / Ø150~300 / Ø280~400

Bar feeder interface

For automatic loading of workpieces, the bar feeder provides a simple yet highly effective system. Interfaces are available on the Vturn lathes so that a number of different barfeeding systems can be worked in conjunction with the lathe. Add to the barfeeder a parts catcher and you have an efficient turnkey system with parts being loaded and unloaded automatically.

Hydraulic steady rest

For greater centering accuracy and easier setup, hydraulic steady rests mounted to the tailstock slideways are also available.

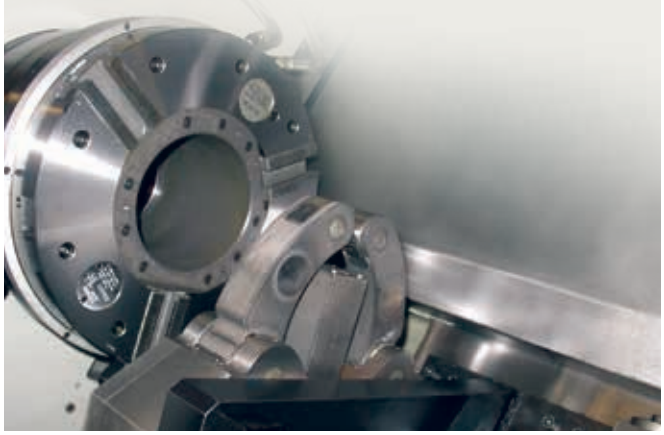

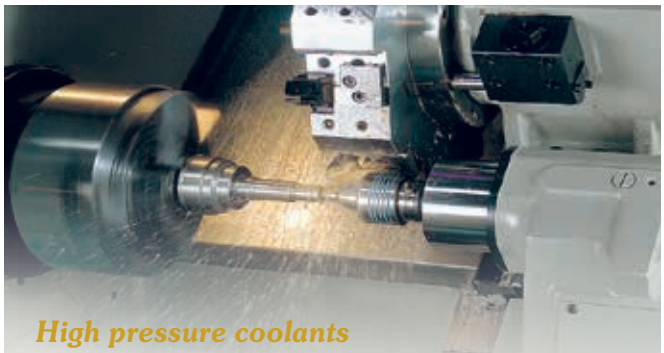

High pressure coolants

Through a combination of high pressure coolant, shower curtain and air gun located through & above the spindle, Victor Taichung can offer you the most efficient chip removal system available on the market today.
When combined with automation system it ensures continuous running time and time again.

Machine Specifications

ITEM \ MODEL		Vturn-16 Vturn-20	VturnII-16 VturnII-20	Vturn-26/60 (HD) Vturn-26/110 (HD)	Vturn-36/85 Vturn-36/125
MACHINE CAPACITY					
Swing over bed	mm	450	590	520	650
Std. Turning dia.	mm	160	370 360	290	445 (398 for CV)
Max. turning dia.	mm	230	440 (330 for CV)	380 (410)	550
Swing over carriage	mm	300	400	350 (380)	550 (458 for CV)
Center distance	mm	635	540	650 1130	890 1290
Bar capacity (hole through draw bar)	mm	40 52	40 52 (66 for LSB)	75 (91 for LSB)	91 (145 for LSB)
AXIS FEEDS					
X axis travel : -Std turret -VD I turret -VDI turret, C-axis - BMT turret, C-axis	mm	 115+20 110+80 - -	 220+20 105+135 105+135 -	 190+50(205+50) 126+130 - -	 275+30 143+217 156+199 -
Z axis travel	mm	600	510	610 1090	855 1255
Y axis travel	mm	-	-	-	-
Rapid feed - X/Z axis	m/min	20 / 24	20 / 24	20 / 24	12 / 15
Rapid feed - Y axis	m/min	-	-	-	-
Feed motor - X/Z axis	kW	3 / 3	1.6 / 3	3 / 3 (4 / 4)	3 / 4
Feed motor - Y axis	kW	-	-	-	-
JOG feed rate	mm/min	0~1260	0~1260	0~1260	0~1260
Ball screw dia x pitch	mm	28 x P6 (X) 40 x P10 (Z)	28 x P8 (X) 40 x P10 (Z)	28 x P8 (X) 40 x P12 (Z)	36 x P6 (X) 50 x P10 (Z)
SPINDLE					
Spindle nose (chuck)	inch	A2-5 (6") A2-6 (8")	A2-5 (6") A2-6 (8")	A2-8 (10")	A2-8 (12") (A2-11 for CV, LSB)
Max. spindle speed	rpm	6000 4200 (opt. 3500)	6000 4200	3500 (opt. 2500)	2500 (opt. 2000)
Spindle motor power	kW	7.5 / 9.0	11 / 15 (opt. 7.5 / 9)	15 / 18.5 (18.5 / 22)	22 / 26 With gearbox
Bearing inside dia.	mm	90 100	90 100	130 (160 for LSB)	160 (220 for LSB)
Spindle bore	mm	52 62	52 62	87 (105 for LSB)	105 (160 for LSB)
TURRET					
No. of tools	no.	12 10 (opt. 8)	12 10 (opt. 8)	10	10 (12 for CV)
No. of live tools	no.	-	12	-	6
Tool shank size	mm	20 20 (opt. 25)	20 25	25	32
Curvic coupling dia.	mm	180	180	210	250
Max. boring bar dia.	mm	32 (VDI-30) 40 (VDI-40)	32 (VDI-30) 40 (VDI-30)	50 (VDI-40)	50 (VDI-50)
Exchange time (T-T)	sec	1	0.3	1	1
Milling speed	rpm	-	3000	-	3000
Milling motor	kW	-	3.0	-	7.0
TAILSTOCK					
Quill dia.	mm	75	75	110	110
Quill stroke	mm	80	80	100	100
Quill taper		MT#4	MT#4	MT#4 (live)	MT#4 (live)
OTHER					
CNC controller (FANUC)		0i-T	0i-T	0i-T	0i-T
Power requirement	KVA	17	21 (28 for CV)	27	38 (59 for CV)
Tank capacity	L.	87	130	100 130	130 150
Approx. machine size	m	3.3 x 1.95 x 1.65	3.3 x 1.95 x 1.7	3.8 (3.9) x 2 x 2 4.4 (4.5) x 1.7 x 2	4.7 x 2.3 x 2.2 5.2 x 2.3 x 2.2
Net weight (incl. standard accessories)	kg	4000	4200	5400 6000	8400 8700

※Machine and controller specifications are subject to change without notice.

Vturn-40/125(CM)(Y) Vturn-40/220(CM)(Y) Vturn-40/325(CM)(Y) Vturn-40/425(CM)(Y)	Vturn-45/125(CM) Vturn-45/220(CM) Vturn-45/325(CM) Vturn-45/425(CM)	Vturn-46/165
780	780	820
520 (492) [432]	520 (492)	520 (468 for CV)
620 (580) [520] (390 for CV)	620 (580)	730 (528 for CV)
620	620	520
1215 2165 3425 4285	1215 2165 3425 4285	1750
91 (opt. 105 for CV/(Y)CM)	117.5 (145 for LSB)	115
310+30 125+315 107+165 280+90 / 290+50	310+30 125+315 - 290+50	365+25 137+303 186+234 -
1250 2200 3250 4250 [4230]	1250 2200 3250 4250	1650
±80	-	-
24 / 24 20 / 20 20 / 12 20 / 8	24 / 24 20 / 20 20 / 12 20 / 8	12 / 15
7	-	-
4 / 4 [7 / 7 (α30i)] 4 / 7 (α30i_30Nm) [7 / 6 (α40i)] 4 / 6 (α40i_38Nm) [7 / 6 (α40i)] 4 / 6 (α40i_38Nm) [7 / 6 (α40i)]	4 / 4 (4 / 4) 4 / 7 (4 / 7) 4 / 6 (4 / 6) 4 / 6 (4 / 6)	3 / 4 (opt. 3 / 7)
4	-	-
0~1260	0~1260	0~1260
32 x P8 (X) 32 x P10 (Y) 50 x P10 (Z) 36 x P10 (X) 50 x P16 (Z) 63 x P16 (Z) 70 x P12 (Z)	32 x P8 (X) 50 x P10 (Z) 36 x P10 (X) 50 x P16 (Z) 63 x P16 (Z) 70 x P12 (Z)	36 x P6 (X) 50 x P10 (Z)
A2-11 (15")	A2-11 (15")	A2-11 (15")
2500	2000 (1500 for LSB)	1500
30 / 37 with gearbox (37 / 45 CV/YCM/CM)	30 / 37 With gearbox	30 / 37 With gearbox
160	190 (220 for LSB)	180
105	135 (160 for LSB)	123
10 (opt. 12) (12 for CV/YCM/CM) 6 (CV), 12 (YCM/CM)	10 (opt. 12) (12 for CM) 6 (CV), 12 (CM)	10 (12 for CV) 6
32	32	32
320 (250) [320/320] 250 (250) [320/320] 320 (250) [320/320] 320 (250) [320/320]	320 [320] 250 [320] 320 [320] 320 [320]	320
50 (VDI-50) [BMT-75]	50 [BMT-75]	60 (VDI-50)
1 3000 7.0	1 3000 7.0	1 3000 7.0
150 150 MT#5 (live)	150 150 MT#5 (live)	150 150 MT#5 (live)
0i-T 50 (64 for CV/YCM)	0i-T 50 (52 for CM)	0i-T 46 (49 for CV)
600 700 850 950	600 700 850 950	250
5.3 x 2.7 x 2.2 [2.9] 7.1 x 2.7 x 2.2 [2.9] 8.5 x 2.7 x 2.2 [2.9] 9.5 x 2.7 x 2.2 [2.9]	5.3 x 2.7 x 2.2 7.1 x 2.7 x 2.2 8.5 x 2.7 x 2.2 9.5 x 2.7 x 2.2	6.2 x 2.5 x 2.5
12700 [13300 / 13100] 15500 [15800 / 15600] 17000 [19500 / 19300] 22000 [22500 / 22300]	12700 [13000] 15500 [15800] 19000 [19300] 22000 [22300]	12800

Standard Accessories

- Power chuck with soft jaws
- Programmable tailstock
- Chip conveyor with cart
- Automatic forced lubrication
- Fully enclosed splash guarding
- Tool holders (excl. VDI turret system)
- Fanuc 0i-TF control
- 3 step warning light
- Air conditioner for electrical cabinet (excl. Vturn-26HD)
- Fanuc e-books (CD)

Optional Accessories

- Kitagawa® chuck
- Hard jaws
- Tailstock center
- Manual tool presenter
- Automatic tool presenter
- Parts catcher
- High pressure coolants
- Auto door
- Air blow system
- Oil-mist remover
- Oil skimmer (std. on Vturn-40/45)
- Bar feeder interface
- Steady rest (Manual or hydraulic)
- C-axis with live tooling
- VDI turret
- 12" chuck/3000rpm for Vturn-26(HD)
- Bigger chuck on Vturn-36/40/45/46
- High/low chucking pressure
- Large spindle bore for Vturn-36/45
- Fanuc manuals

Machine Color Options

RAL 2008 (Victor's orange)

RAL 7024 (Graphite grey)

Tooling accessories
(excl. VDI or BMT turret model)

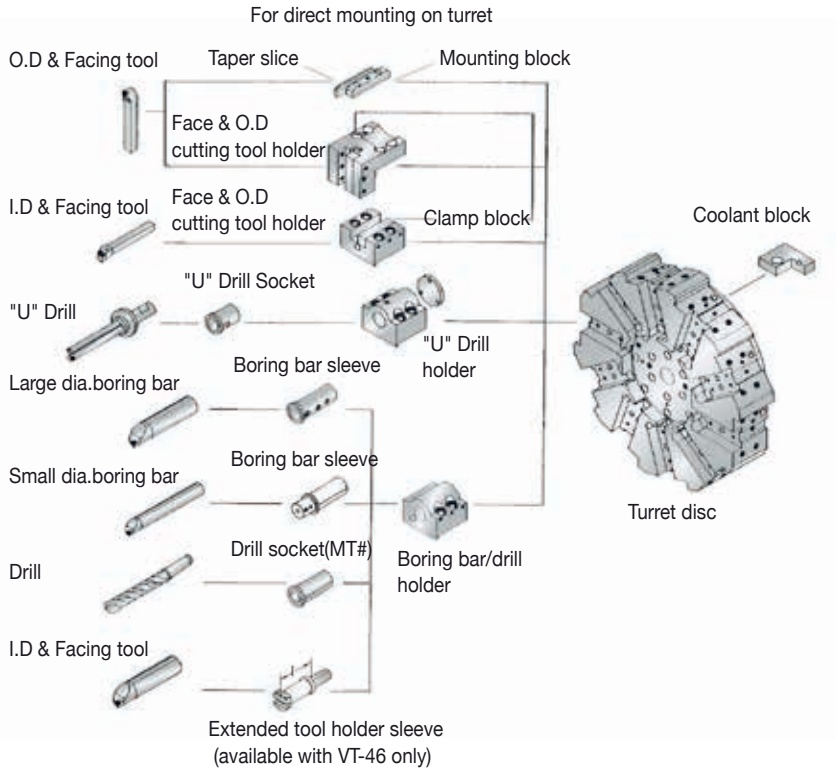

Milling Spindle Output

VturnII-16/20CV (3kW)

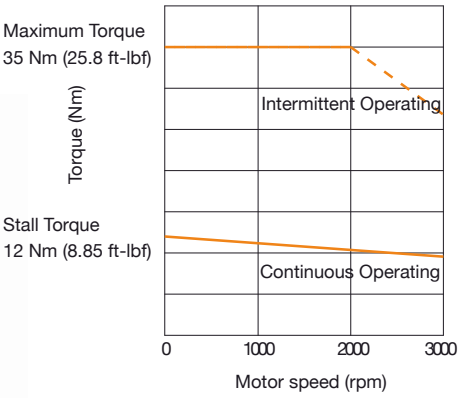

Vturn-36CV/40CV/40(Y)CM/ 45CM/46CV (7kW)

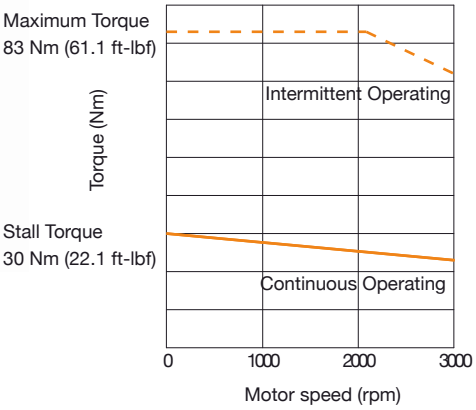

TOOL \ MODEL	Vturn-16 VturnII-16	Vturn-20	VturnII-20	Vturn-26 Vturn-26HD	Vturn-36 Vturn-40 Vturn-45	Vturn-46
Tool shank for turret disk	20 mm	20 mm	25 mm	25 mm	32 mm	32 mm
Maximum boring bar dia.	32 mm	32 mm	40 mm	50 mm	50 mm	60 mm
Face + O.D. cutting tool holder	2	2	2	2	1	1
Face + I.D. cutting tool holder	1	1	1	1	1	1
Extended I.D. cutting tool holder	-	-	-	-	-	2
Boring bar holder						
32 mm	6	6	-	-	-	-
40 mm	-	-	4	5	-	-
50 mm	-	-	-	1	5	-
60 mm	-	-	-	-	-	5
Boring bar sleeve						
8 mm	1	1	-	1	-	-
10 mm	2	2	2	2	1	-
12 mm	2	2	2	2	1	-
16 mm	2	2	2	2	2	-
20 mm	2	2	2	2	2	2
25 mm	2	2	2	2	2	2
32 mm	-	-	2	2	2	2
40 mm	-	-	-	-	2	2
50 mm	-	-	-	-	-	2
Drill socket						
MT1	Opt.	Opt.	1	-	-	-
MT2	1	1	1	Opt.	-	-
MT3	Opt.	Opt.	1	1	Opt.	-
MT4	-	-	-	Opt.	1	1
U drill holder						
32 mm	1	1	-	-	-	-
40 mm	-	-	1	1	-	-
U drill socket						
20 mm	1	1	Opt.	Opt.	-	-
25 mm	1	1	1	1	1	-
32 mm	-	-	-	1	1	2
40 mm	-	-	-	-	Opt.	2

※Tooling accessories are subject to change without notice.

Victor's Fanuc 0i-TF (Type 1)/32i-B Control Specifications

VICTOR-TAICHUNG

Standard:

ITEM	SPECIFICATION	DESCRIPTION
Controlled Axes:		
1.	Controlled Axes	2 Axes (X, Z)
2.	Simultaneous Controlled Axes	Position/Linear interpolation/Circular interpolation (2/2/2)
3.	Least Input Increment	0.001mm / 0.0001 inch / 0.001 deg.
4.	Least Input Increment 1/10	0.0001mm / 0.00001 inch / 0.0001 deg.
5.	Max. command value	±99999.999mm (±9999.9999in)
6.	Fine Acceleration & Deceleration Control	Std.
7.	HRV Control	Std.
8.	Inch / Metric Conversion	Std. (G20/G21)
9.	Interlock	All Axes / Each Axis / Cutting Block Start
10.	Machine Lock	All Axes / Each Axis
11.	Emergency Stop	Std.
12.	Over-travel	Std.
13.	Stored Stroke Check 1	Std.
14.	Mirror Image	Each Axis
15.	Chamfering on/off	Std.
16.	Follow-up	Std.
17.	Unexpected disturbance torque detection function	Std. (to be used to tool load monitoring)
18.	Position switch (with Victor's own PLC)	Std. (to be used for security)
Operation:		
1.	Automatic Operation	Std.
2.	MDI Operation	MDI B
3.	DNC Operation	Reader / Puncher Interface is Required
4.	DNC Operation with Memory Card	PCMCIA Card Attachment is Required
5.	Program Number Search	Std.
6.	Sequence Number Search	Std.
7.	Sequence number comparison and stop	Std.
8.	Buffer Register	Std.
9.	Dry Run	Std.
10.	Single Block	Std.
11.	JOG Feed	Std.
12.	Manual Reference Position Return	Std.
13.	Manual Handle Feed	1 Unit / Each Path
14.	Manual Handle Feed Rate	X1, X10, X100
Interpolation:		
1.	Positioning	G00
2.	Threading synchronous cutting	Std.
3.	Multiple threading	Std.
4.	Threading retract	Std.
5.	Continuous threading	Std. (G76)
6.	Variable threading	Std. (G34)
7.	Linear Interpolation	G01
8.	Circular Interpolation	G02, G03 (multi-quadrant is possible).
9.	Dwell	G04
10.	Skip Function	G31
11.	Reference Position Return	G28
12.	Reference Position Return Check	G27
13.	2ND Reference Position Return	Std.
Feed:		
1.	Rapid Traverse Rate	Std.
2.	Rapid Traverse Override	F0, 25%, 50%, 100%
3.	Feed Per Minute	G98 (mm/min)
4.	Feed Per Revolution	G99 (mm/rev)
5.	Tangential Speed Constant Control	Std.
6.	Cutting Feed rate Clamp	Std.
7.	Automatic Acceleration / Deceleration	Rapid traverse: linear; Cutting feed: exponential
8.	Linear accel/deceleration after cutting feed interpolation	Std.
9.	Feed rate Override	0~150%
10.	Jog Override	0~100%
11.	Feed Stop	Std.
Program Input:		
1.	EIA / ISO Automatic Recognition	Std.
2.	Label Skip	Std.
3.	Parity Check	Std.
4.	Control In / Out	Std.
5.	Optional Block Skip	1
6.	Max. Programmable Dimension	±8-Digit
7.	Program Number	O8-Digit
8.	Sequence Number	N5-Digit
9.	Absolute / Incremental Programming	G90/G91
10.	Decimal Point Programming / Pocket Calculator Type Decimal Point Programming	Std.
11.	Input Unit 10 Time Multiply	Std.
12.	Diameter/radius programming	Std.
13.	Plane Selection	G17, G18, G19
14.	Automatic Coordinate System Setting	Std.
15.	Work piece Coordinate System	G52, G53, G54~G59
16.	Direct Drawing Dimension Programming	Std.
17.	G code System A	Std.
18.	Chamfering/corner R	Std.
19.	Programmable Data Input	G10
20.	Sub Program Call	10 folds nested
21.	Custom Macro B	Std.
22.	Canned Cycles	Std.
23.	Multiple Repetitive Cycle	Std. (G70~G76)
24.	Multiple Repetitive Cycle 2 (Pocket profile)	Std. (G70~G76 type II)
25.	Canned Cycle for Drilling	Std.
26.	Program Format	FANUC std. format
27.	Program Stop / Program End	M00 / M01 / M02 / M30
Auxiliary Spindle Speed Function:		
1.	Auxiliary Function Lock	Std.
2.	High Speed M / S / T Interface	Std.
3.	Spindle Speed Function	Std.
4.	Constant Surface Speed Control	Std.
5.	Spindle Override	50~120%
6.	Actual Spindle Speed Output	Std.
7.	1st Spindle Orientation	Std.
8.	1st Spindle Output Switching Function	Std.
9.	M Code Function	M3 digit
10.	S Code Function	S5 digit
11.	T Code Function	T2 digit
12.	Rigid Tapping (Spindle)	Std.
Tool Function & Tool Compensation:		
1.	Tool Function	T7+1/T6+2digits
2.	Tool Offset Pairs	±6-digit 64 pairs
3.	Tool Nose Radius Compensation	Std. (G40/G41/G42)
4.	Tool Geometry/wear Compensation	Std.
5.	Number of Tool Offsets (in total)	64 sets
6.	Automatic Tool Offset	Std.
7.	Direct Input of Tool Offset Value Measured B	Std.
Accuracy Compensation:		
1.	Backlash Compensation	Rapid Traverse / Cutting Feed
2.	Stored Pitch Error Compensation	Std.
Edit Operation:		
1.	Part Program Storage Length (in total)	1280m/512kB (0i-F/32iB)
2.	Number of Registerable programs (in total)	400 (0i-F), 400 (32iB)
3.	Part Program Editing	Std.
4.	Program Protect	Std.
5.	Background Editing	Std.
6.	Memory card editing	Std.
Setting and Display:		
1.	Status Display	Std.
2.	Clock Function	Std.
3.	Current Position Display	Std.
4.	Program Display	Program name 31 characters
5.	Parameter Setting and Display	Std.
6.	Self Diagnosis Function	Std.
7.	Alarm Display	Std.
8.	Alarm History Display	25
9.	Operation History Display	Std.
10.	Help Function	Std.
11.	Run Hour and Parts Count Display	Std.
12.	Actual Cutting Feedrate Display	Std.
13.	Display Spindle Speed and T Code At All Screens	Std.
14.	Dynamic Graphic Display	Std.
15.	Servo Setting Screen	Std.
16.	Display of Hardware and Software Configuration	Std.
17.	Multi-Language Display	Std.
18.	Data Protection Key	Std.
19.	Erase CRT Screen Display	Std.
20.	Spindle Setting Screen	Std.
21.	Color LCD / MDI	8.4" (0i), 10.4" (0i-F*1/32iB)
Data Input / Output:		
1.	Reader / Puncher Interface	RS-232 interface
2.	Memory Card Interface	Std.
3.	External Work piece number search	9999
4.	USB port	Std.
C Axis Function (used on CV/Y models):		
1.	Control Axes Expansion	Std.
2.	Simultaneously Controlled Axes Expansion	Std.
3.	Coordinate System Rotation	Std.
4.	Rotary Axis Designation	Std.
5.	Rotary Axis Roll-over	Std.
6.	Axis Control by PMC	Std.
7.	Control Axis Detach (for Cf axis)	Std. (used on Vturn only)
8.	Polar Coordinate Interpolation	Std. (G112/G113)
9.	Cylindrical Interpolation	Std. (G107)
10.	CS Contouring Control	Std.
11.	Coordinate System Rotation	Std.
12.	Rigid Tapping (C-axis) with Victor's own PMC	Std.

OPTIONS:

With hardware included:		**0i-F**	**32iB**
1.	Conversational programming (Manual guide i)*1	☐	Std.
2.	Conversational programming (Cap i)	N.A.	N.A.
3.	Date server (with PCB and ATA card)	☐	☐
4.	Embedded Ethernet (10Mbps)	Std.	Std.
5.	Fast Ethernet (100Mbps, available in Data server)	☐	☐
6.	Tool life management	☐	☐
7.	Part Program Storage Length 1280mm (in total)	Std.	☐
8.	Part Program Storage Length 2560mm (in total)	N.A.	☐
9.	Quick program restart	☐	☐
10.	Optional block skip 2-9 blocks	☐	☐
11.	Polygon turning (by C-axis) with Victor's own PLC	☐	☐
12.	Manual handle feed 2 (2nd MPG)	N.A.	☐
13.	Reader/Puncher interface 2 (2nd RS232 interface)	N.A.	☐
14.	External data input	N.A.	☐
15.	Profibus	☐	☐
Without hardware included:			
16.	Program number O8-digit	☐	☐
17.	Circular thread cutting (G35)	N.A.	☐
18.	Circular interpolation by 9-digit R designation	N.A.	Std.
19.	Tool offset value 7 digits	Std.	Std.
20.	Number of registered program 1000 (in total)	N.A.	☐
21.	G code system B/C	N.A.	☐
22.	Type format for FS 15	N.A.	☐
23.	Play back	N.A.	☐
24.	Three-dimensional coordinate conversion	N.A.	☐
25.	Direct input of offset value measured for 2 spindle lathe	N.A.	☐
26.	AI NANO control (G5.1 Q1)	N.A.	☐
27.	JERK control	N.A.	☐
28.	Bell-type acceleration/deceleration before look ahead interpolation N.A.	N.A.	Std.*2

*1. Manual Guide i is available on 0i-F when the monitor is upgraded to 10.4" LCD.
*2. Included in AI NANO control

Technical Drawings

Vturn II-16

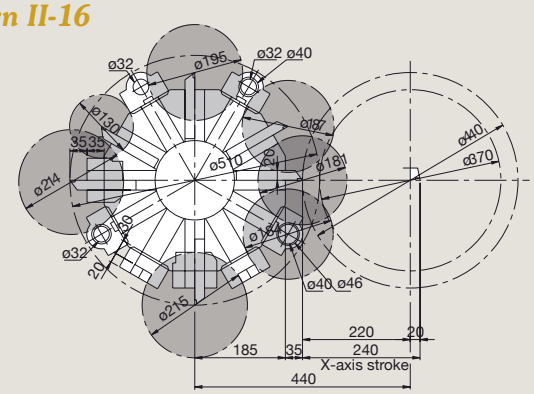

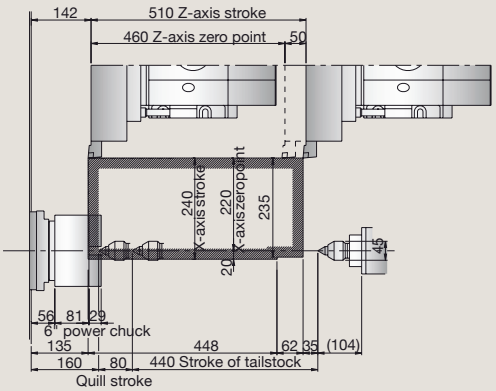

Vturn II-16CV with C axis & VDI turret

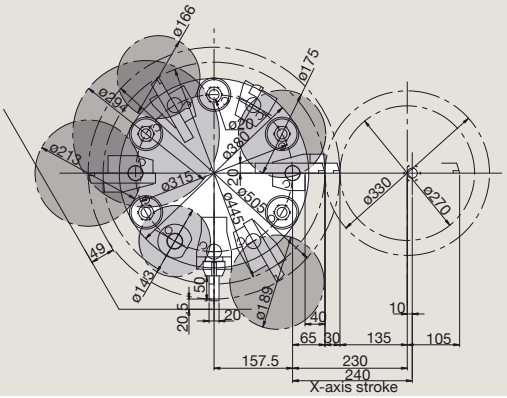

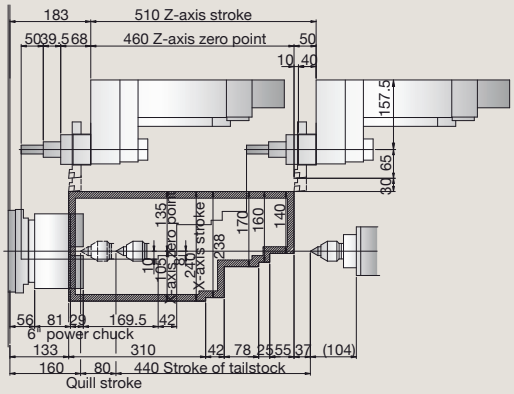

Vturn II-20

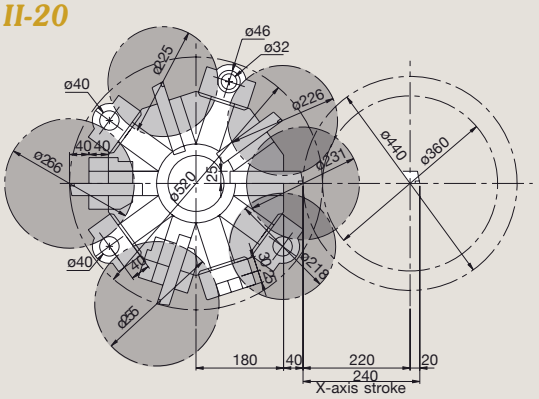

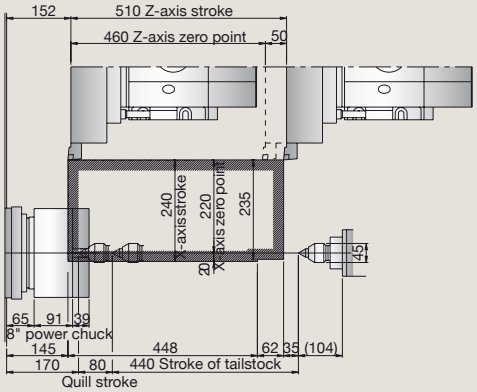

Vturn II-20CV with C axis & VDI turret

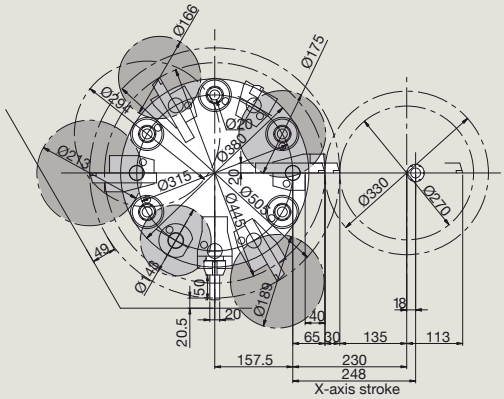

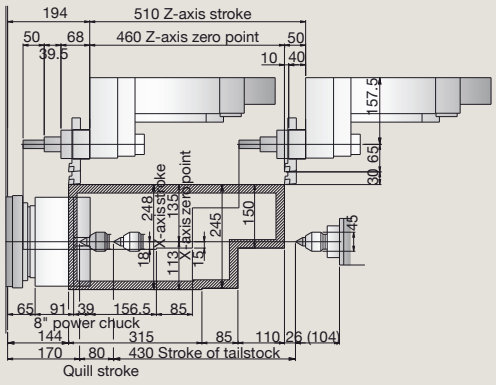

Technical Drawings

Vturn-16

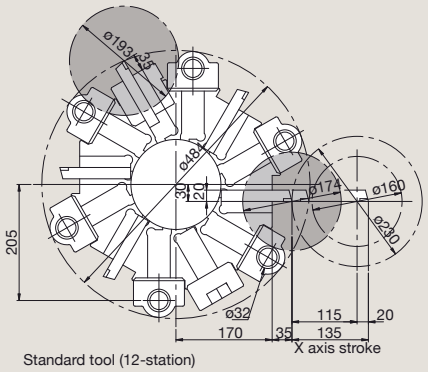

Standard tool (12-station)

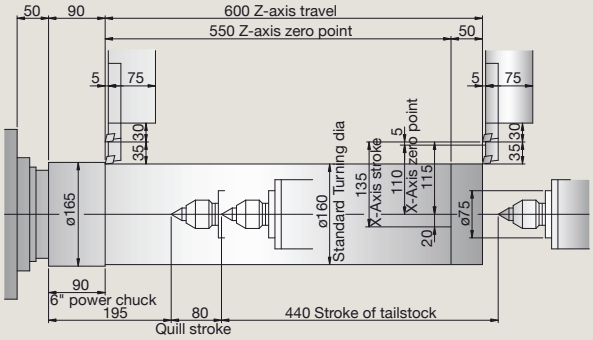

Vturn-20

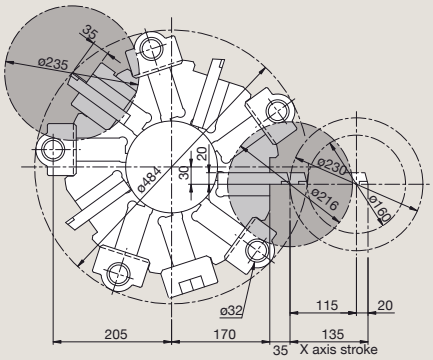

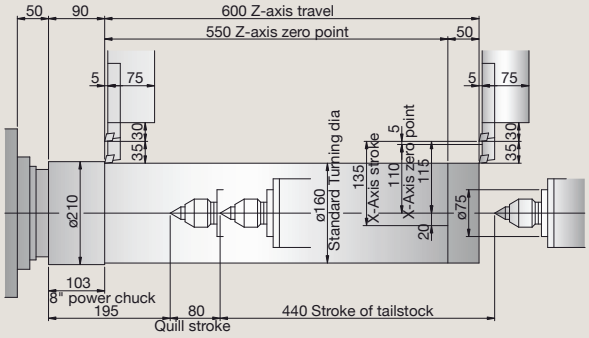

Vturn-26

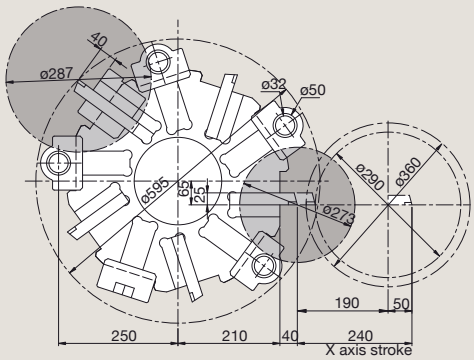

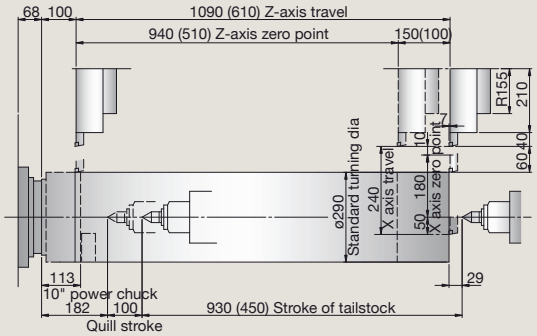

Vturn-26/110 (Vturn-26/60)

Vturn-26HD

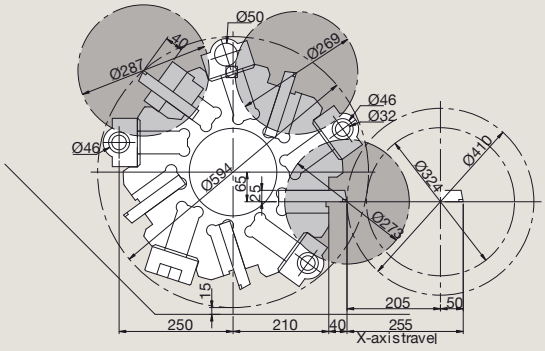

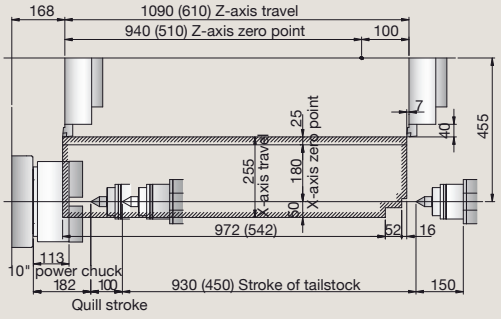

Vturn-26/110HD (Vturn-26/60HD)

Technical Drawings

Vturn-36

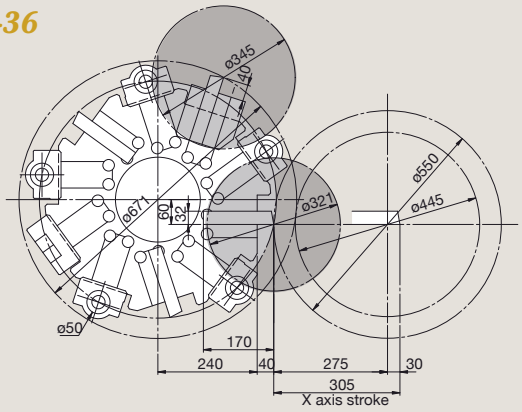

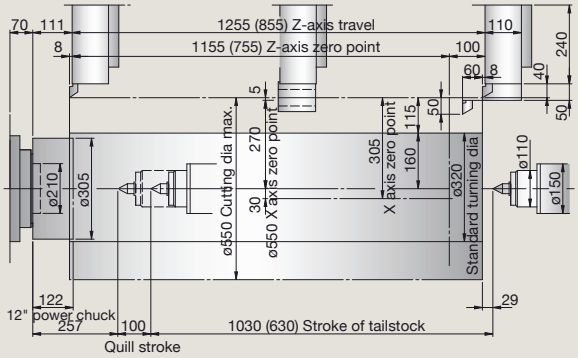

Vturn-36/125 (Vturn-36/85)

Vturn-36CV

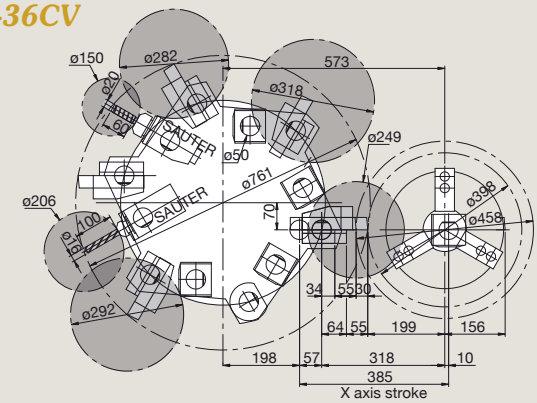

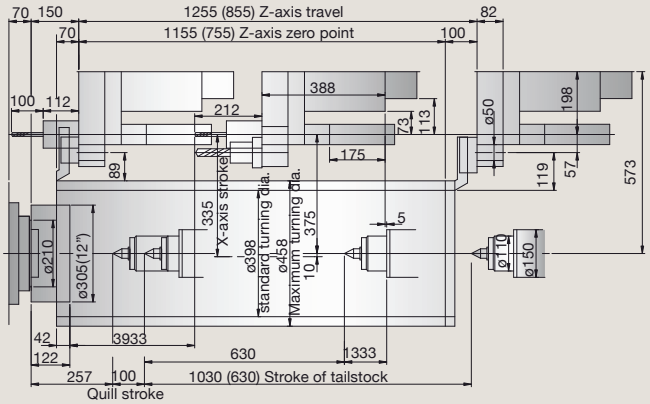

Vturn-36/125 (Vturn-36/85)

Vturn-40

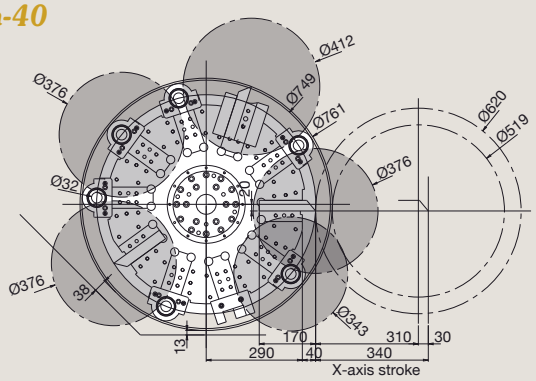

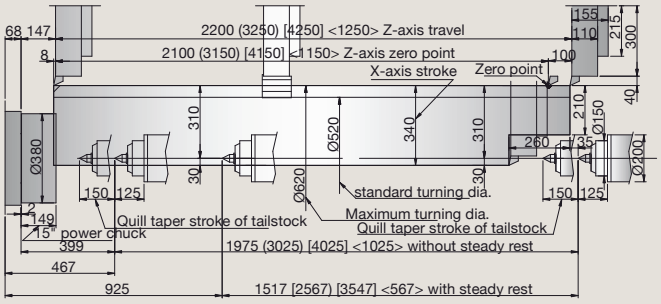

Vturn-40/220 (Vturn-40/325) [Vturn-40/425] <Vturn-40/125>

Vturn-40CV

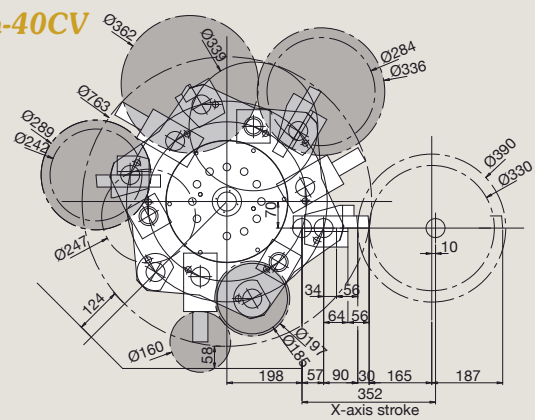

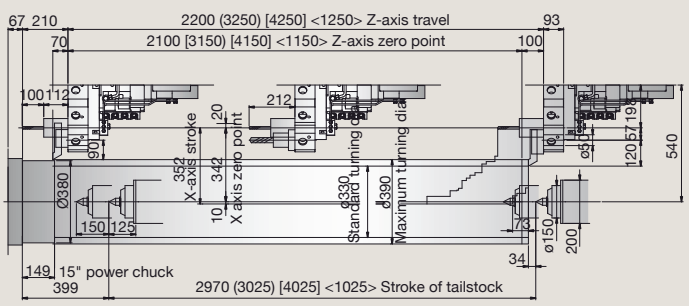

Vturn-40/220 (Vturn-40/325) [Vturn-40/425] <Vturn-40/125>

Technical Drawings

VICTOR-TAICHUNG

Vturn-40YCM

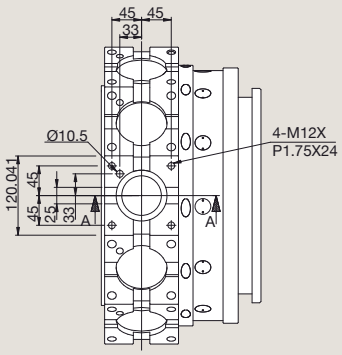

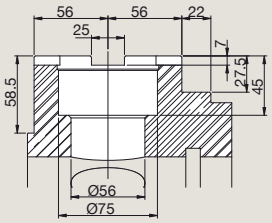

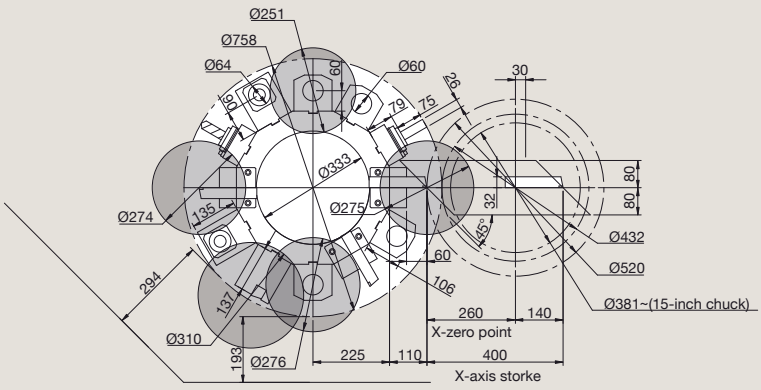

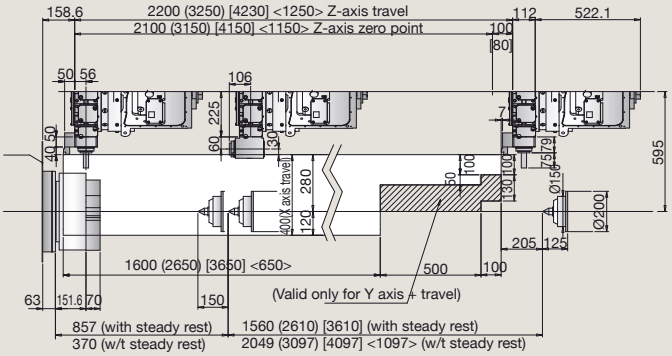

Vturn-40/220 (Vturn-40/325) [Vturn-40/425] <Vturn-40/125>

Vturn-45

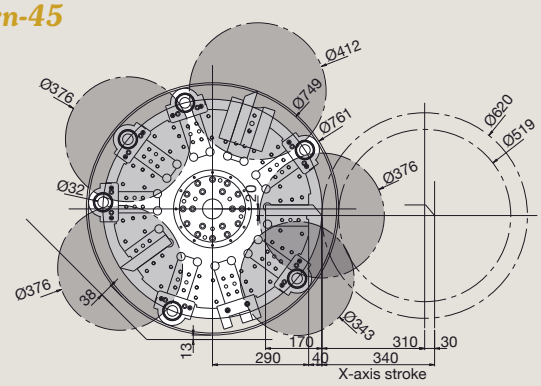

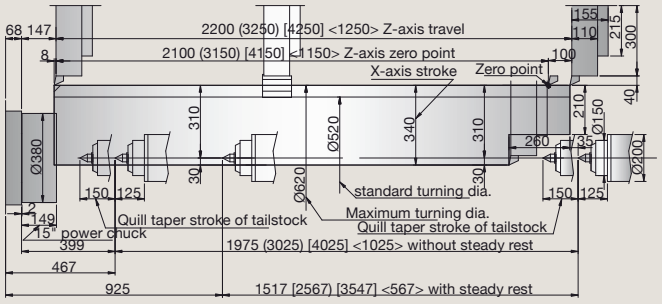

Vturn-45/220 (Vturn-45/325) [Vturn-45/425] <Vturn-45/125>

Vturn-45CM (Vturn-40CM)

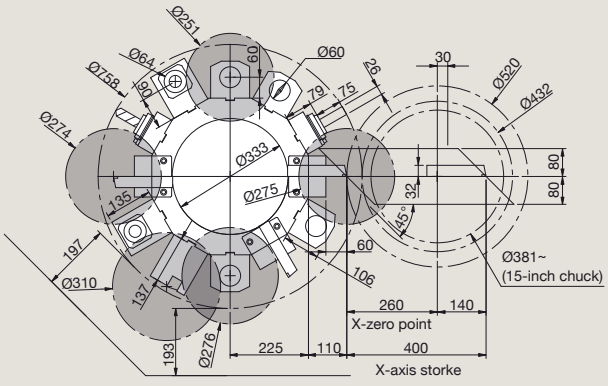

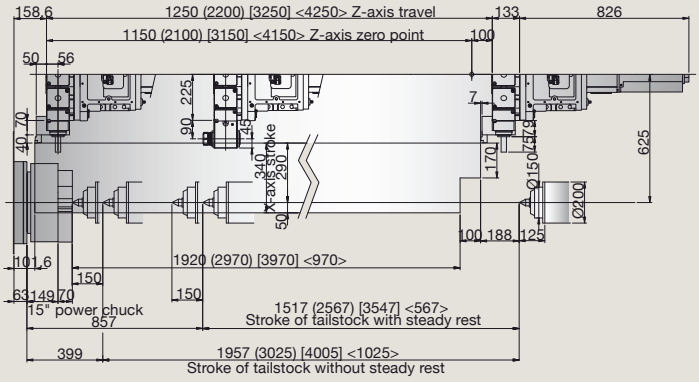

Vturn-45/220 (Vturn-45/325) [Vturn-45/425] <Vturn-45/125>

Technical Drawings

Vturn-46

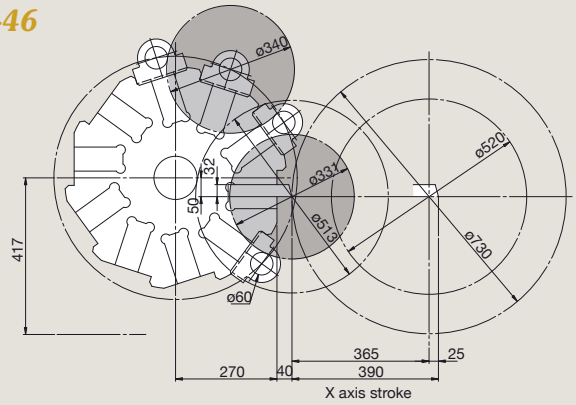

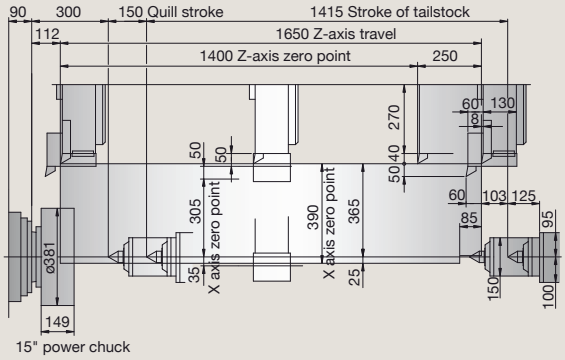

Vturn-46CV

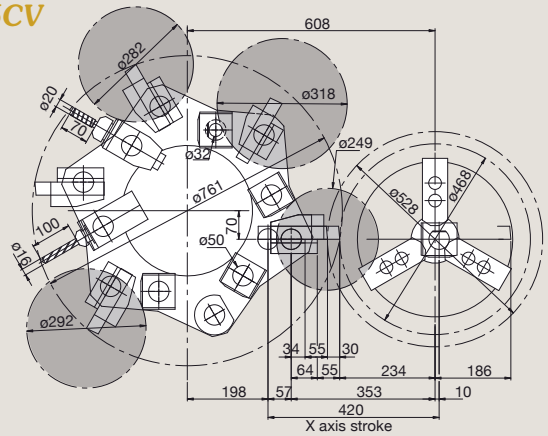

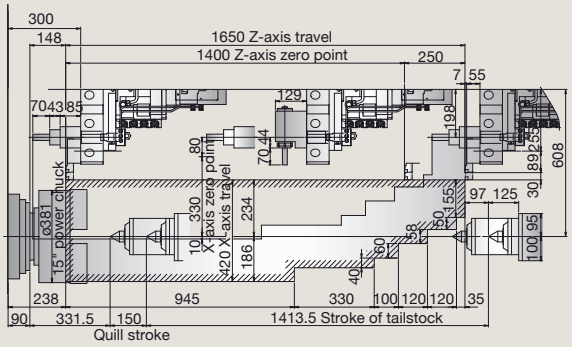

Machine Layout (excl. Transformer)

Vturn II-16/20

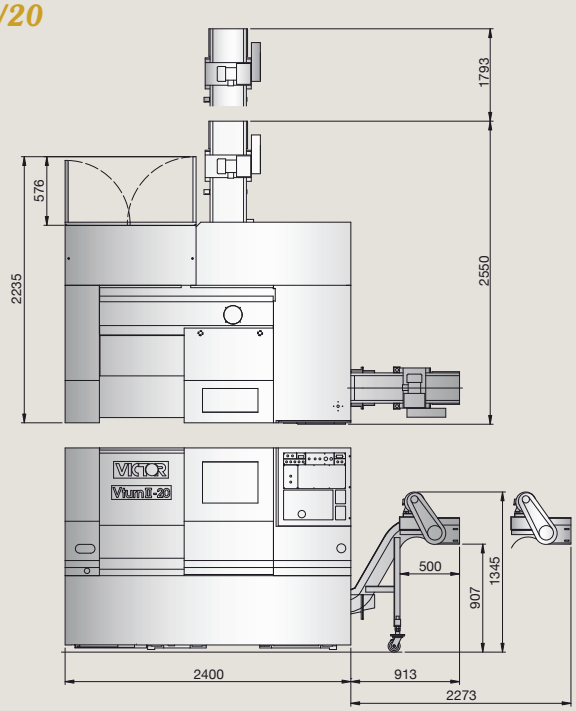

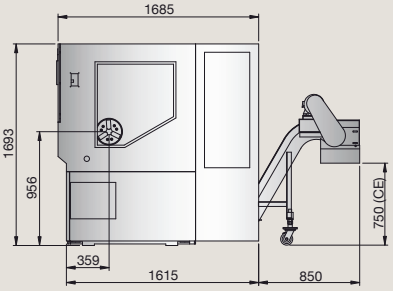

Machine Layout (excl. Transformer)

Vturn-16/20

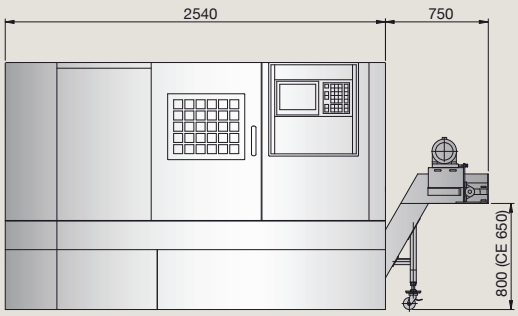

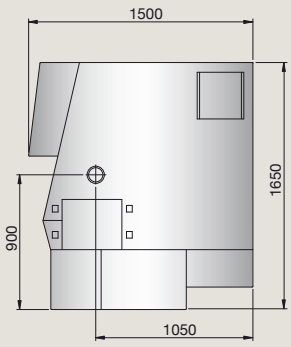

Vturn-26

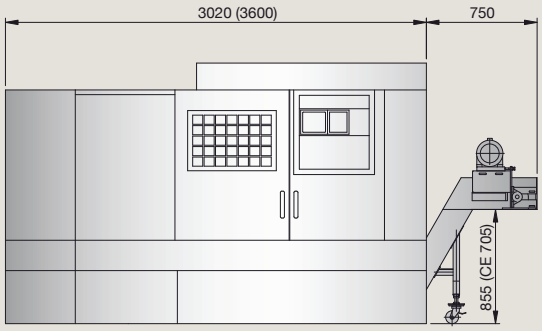

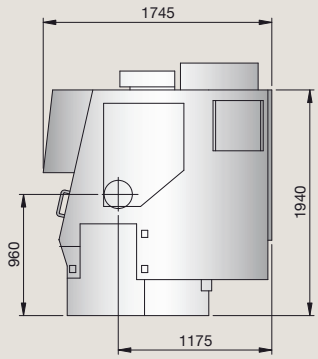

Vturn-26/60 (Vturn-26/110)

Vturn-26HD

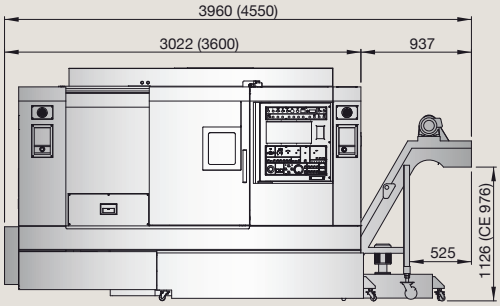

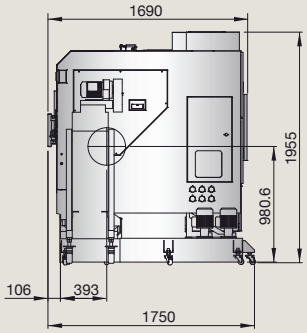

Vturn-26/60HD (Vturn-26/110HD)

Vturn-36

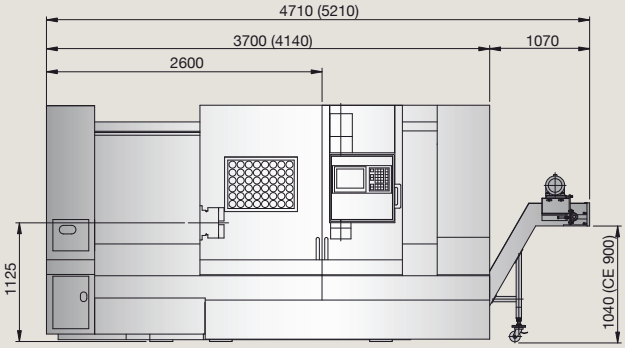

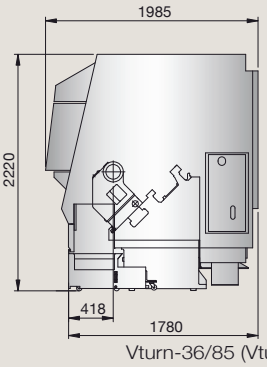

Vturn-36/85 (Vturn-36/125)

Machine Layout (excl. Transformer)

Vturn-40/125 [Y] (CV/CM/YCM, built-in spindle)

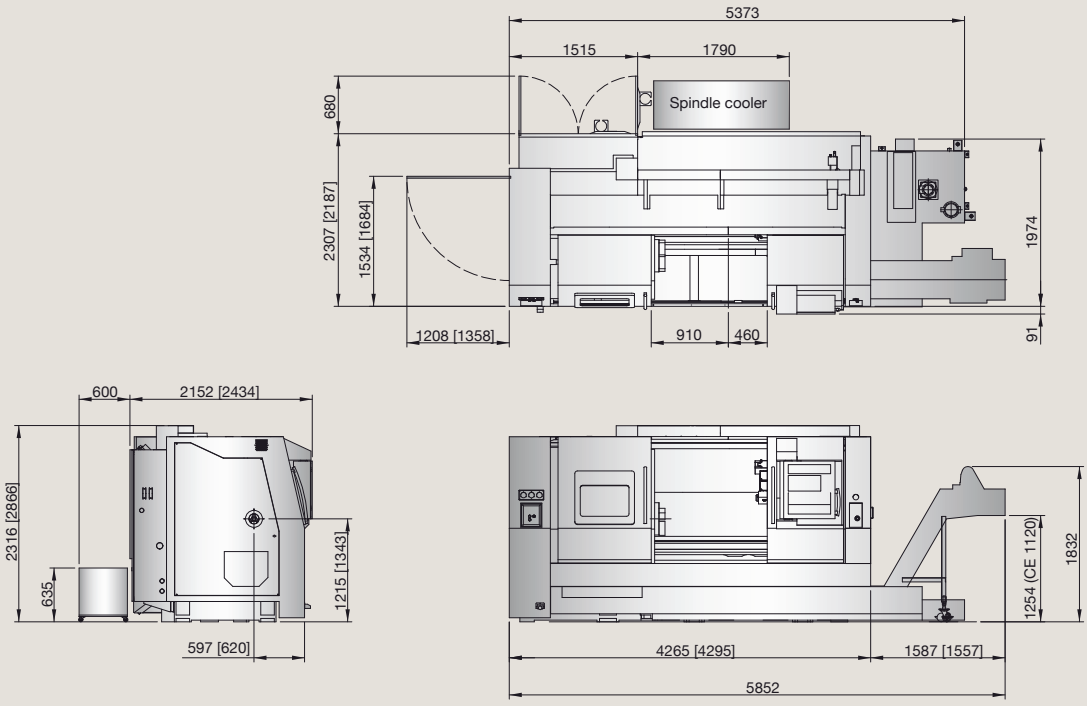

Vturn-40/220_325_425 (Y)

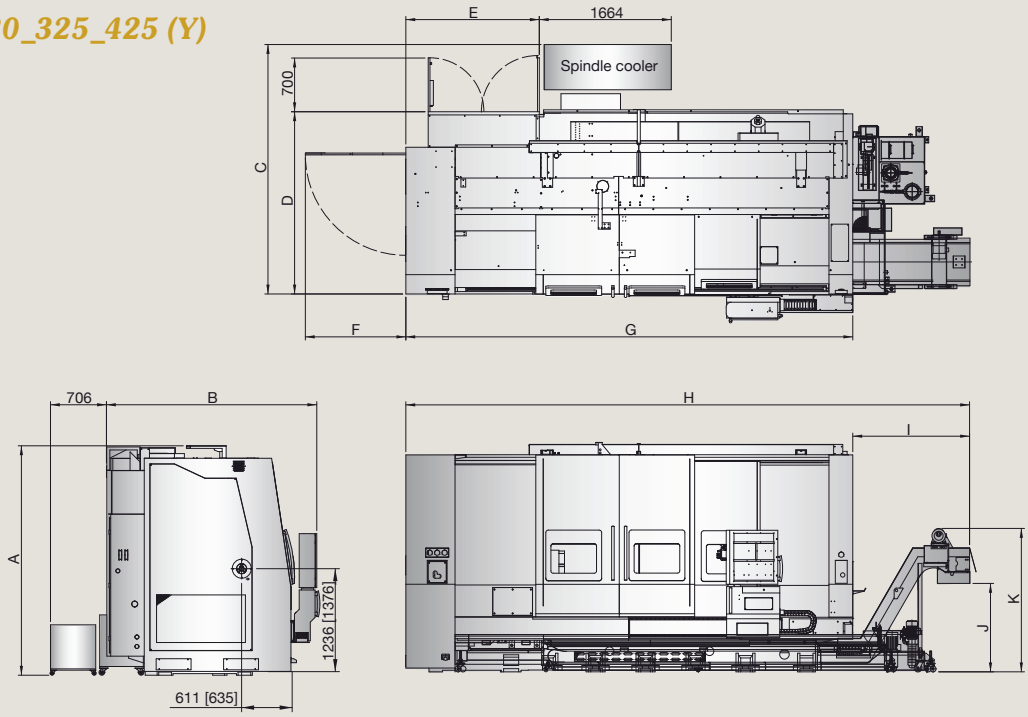

ITEM \ MODEL	A	B	C	D	E	F	G	H	I	J	K
Vturn-40/220 (Y)	2370 (2920)	2385 (2654)	2909 (3168)	2037 (2297)	1679 (1682)	1130 (1330)	5633 (5633)	7110 (7110)	1477 (1477)	1254 (CE 914)	1847 (1847)
Vturn-40/325 (Y)	2370 (2920)	2385 (2654)	2909 (3184)	2037 (2312)	1734 (1734)	1244 (1330)	6955 (6955)	8432 (8665)	1477 (1710)	1254 (CE 914)	1807 (2148)
Vturn-40/425 (Y)	2370 (2920)	2385 (2654)	2929 (3204)	2037 (2312)	1852 (1852)	1244 (1330)	8273 (8323)	9750 (10033)	1477 (1710)	1254 (CE 914)	1807 (2184)

Machine Layout (excl. Transformer)

Vturn-45/125 (CM, belt-driven spindle with gearbox)

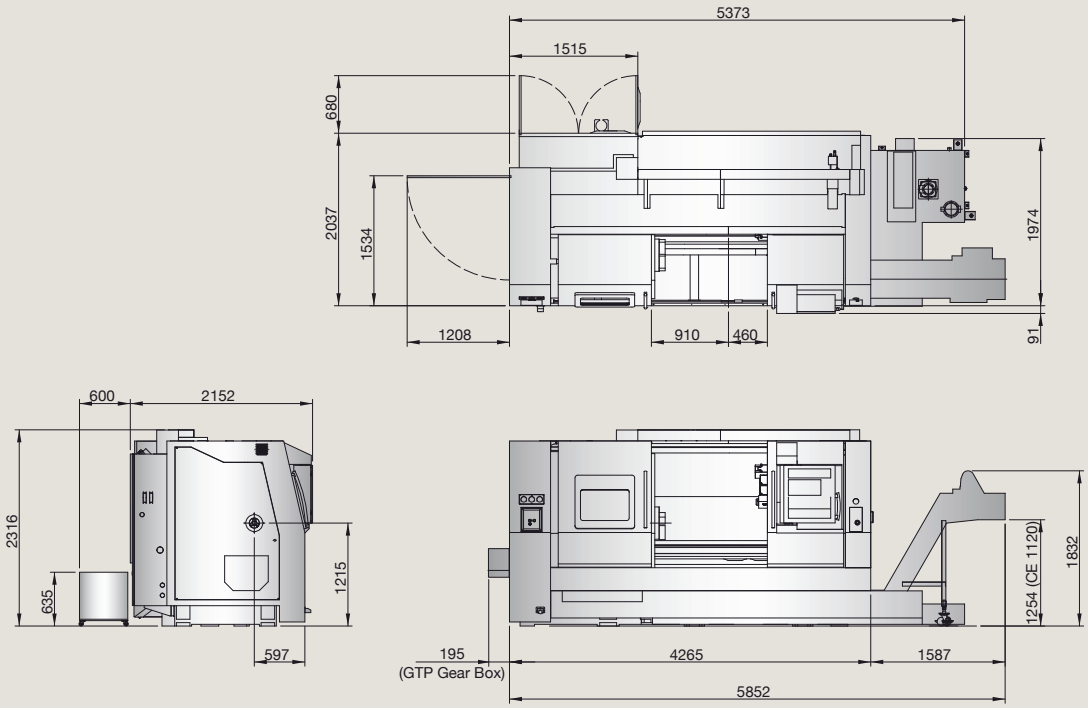

Vturn-45/220_325_425 (CM)

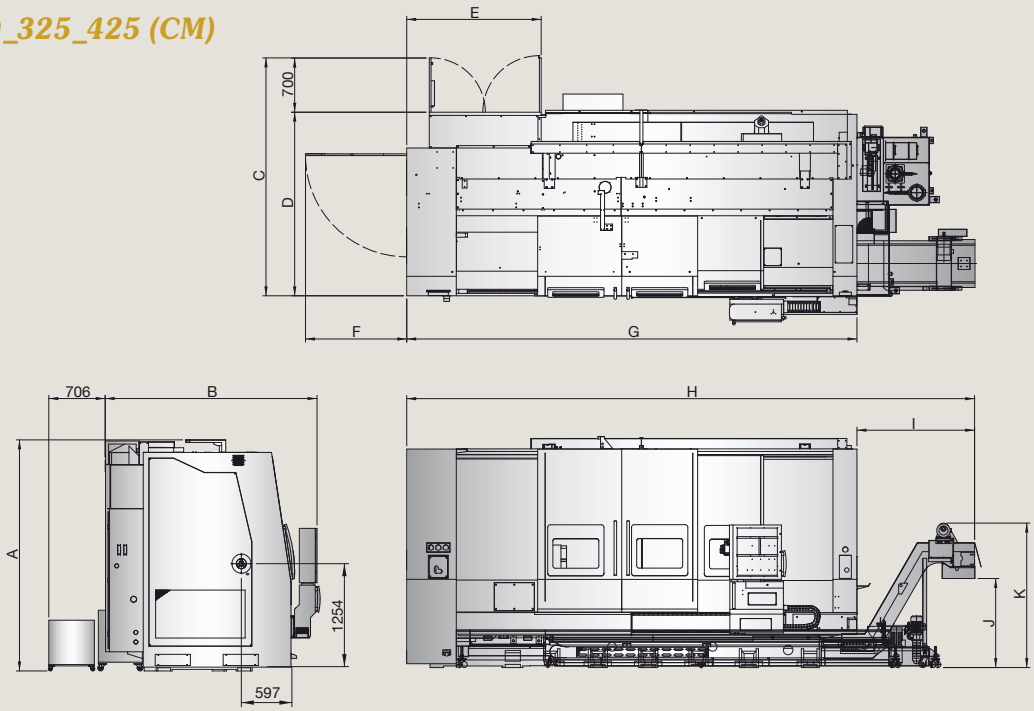

ITEM \ MODEL	A	B	C	D	E	F	G	H	I	J	K
Vturn-45/220	2370	2385	2737	2037	1679	1130	5633	7110	1477	1254 (CE 914)	1847
Vturn-45/325	2370	2385	2737	2037	1734	1244	6955	8432	1477	1254 (CE 914)	1807
Vturn-45/425	2370	2398	2737	2037	1852	1244	8273	9750	1477	1254 (CE 914)	1807

Machine Layout (excl. Transformer)

Vturn-46

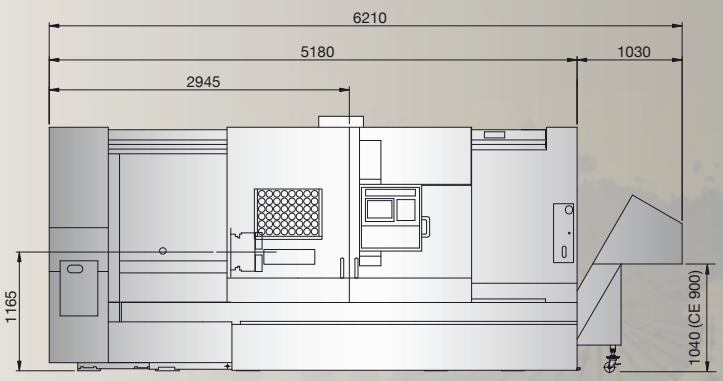

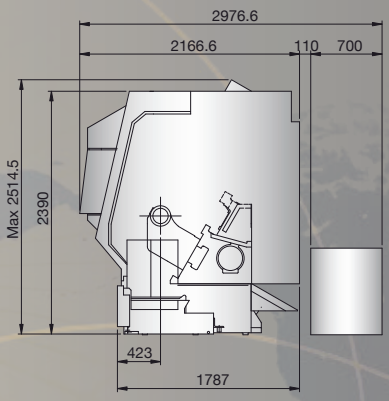

Vturn-NP16 with built-in robot

Vturn-A20Y with Y-axis BMT turret

Vturn-V1000 vertical lathe

VictorTaichung profile:
Sales turnover: USD 101.5 mil's (in 2019)*
No. of employees: 806
*Exchange rate: 1 USD=30 TWD.

THE VICTOR-TAICHUNG COMPANIES

TAIWAN
http://www.victortaichung.com
E-mail :info@mail.or.com.tw
☐ Victor Taichung Machinery Works Co., Ltd.
No. 1, Jingke Central 2nd Rd.,
Nantun Dist., Taichung 40852,
TAIWAN, R.O.C.
TEL : 886-4-23592101
FAX : 886-4-23593389

FRANCE
☐ Victor France
TEL : 33-1-64772000
FAX : 33-1-64772063

GERMANY
☐ Victor GmbH
TEL : 49-2261-478434
FAX : 49-2261-478327

SOUTH AFRICA
☐ Victor Fortune (PTY) Ltd.
TEL : 27-11-3923800
FAX : 27-11-3923899

MALAYSIA
☐ Victor Machinery (M) SDN. BHD.
TEL : 60-3-56337180
FAX : 60-3-56337191

THAILAND
☐ Victor (Thailand) Co. Ltd.
TEL : 66-2-9263735
FAX : 66-2-9032373

INDONESIA
☐ PT. Victor Machinery Indonesia
TEL : +62-21-88958504
FAX : +62-21-88958513

USA
☐ Fortune International Inc.
TEL : 1-732-2140700
FAX : 1-732-2140701

CHINA
☐ Victor Taichung
Machinery (Shanghai)
TEL : 86-21-59768018
FAX : 86-21-59768009

19072503 acts TEL: 04-24733326